"It feels like something big is about to happen: graphs show us the yearly growth of populations, atmospheric concentrations of carbon dioxide, Net addresses, and Mbytes per dollar. They all soar up to form an asymptote just a few years ahead: The Singularity. The end of everything we know. The beginning of something we may never understand.

I think of the oak beams in the ceiling of College Hall at New College, Oxford. Last century, when the beams needed replacing, carpenters used oak trees that had been planted in 1386 when the dining hall was first built. The 14th-century builder had planted the trees in anticipation of the time, hundreds of years in the future, when the beams would need replacing. Did the carpenters plant new trees to replace the beams again a few hundred years from now?

I want to build a clock that ticks once a year. The century hand advances once every one hundred years, and the cuckoo comes out on the millennium. I want the cuckoo to come out every millennium for the next 10,000 years."

Danny Hillis (designer of the clock)

THE CLOCK OF THE LONG NOW

mechanical drawings and assemblies

THE CLOCK OF THE LONG NOW

mechanical drawings and assemblies

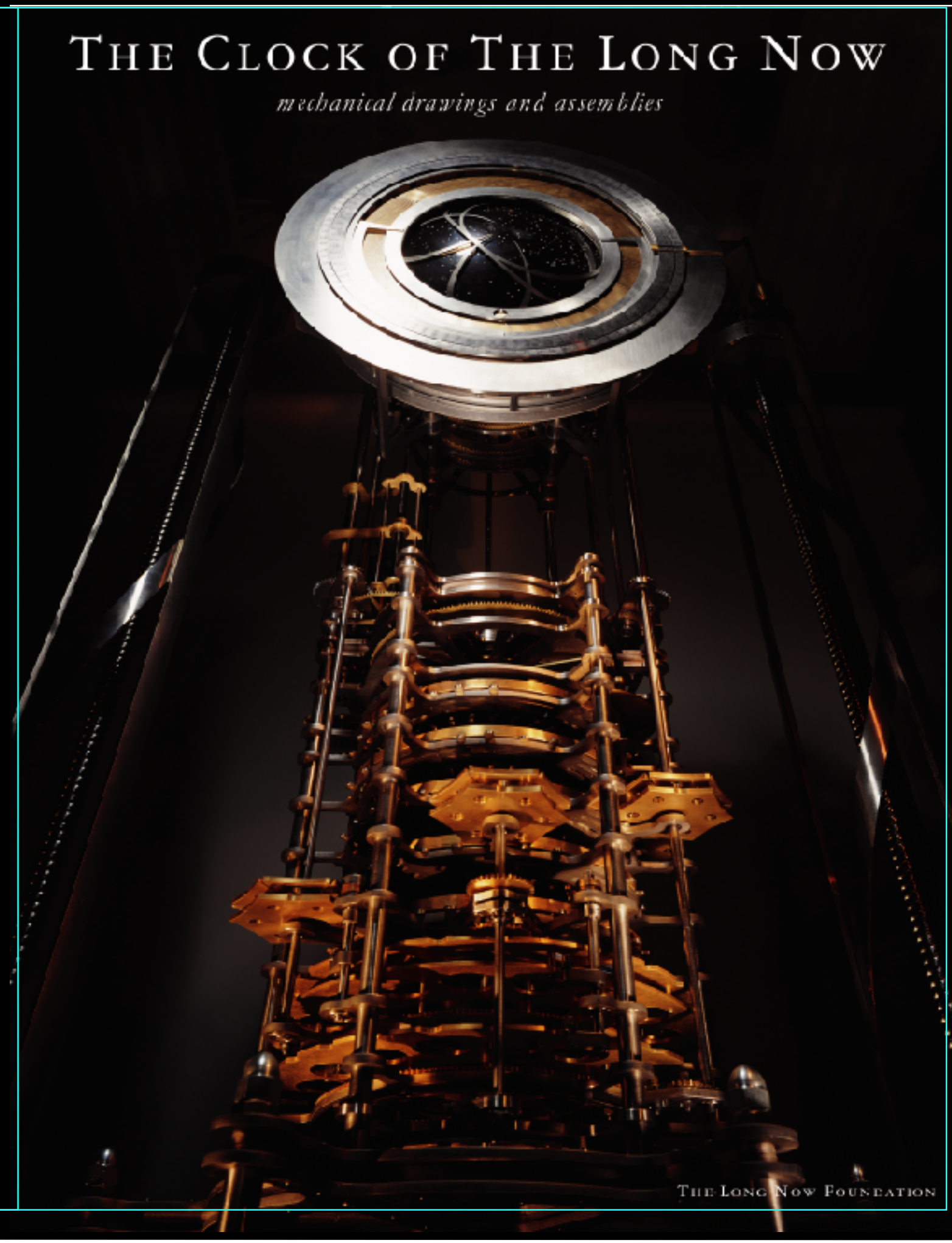

THE LONG NOW FOUNDATION

The Clock of The Long Now

mechanical drawings and assemblies

Danny Hillis - design and concept
Alexander Rose - design and project management
Elizabeth Woods - engineering and design
David Munro - movement design and construction
Chris Rand - head machinist
Erio Brown - machinist
Jerome Walker - EDM machining

About this book

This book is a record of every drawing used to build the first prototype of a 10,000 year, all mechanical clock. These drawings were done by several different designers for many different manufacturing processes over the course of three years. For this reason the standards and explanations on the drawings vary from assembly to assembly. We hope that by distributing this document, the record of this Clock will be widely distributed and increase its chances of long term survival. Please take care of your copy.

The prototype Clock built from these drawings is just that, a prototype. This is the first in a series of increasingly larger Clocks being built by The Long Now Foundation towards the final goal of a monumental version that will tick for 10,000 years.

There are three main systems within the Clock; Power, Timing, and Display. Power in the Clock comes from a traditional source, gravity. The twin drives incorporate a weight driven system where the descending weight, governed by a fly, turns a threaded bar to power the Clock.

Timing in the Clock comes from two sources; one accurate in the short term and one in the long term. The short term timing is kept by a torsional three bar pendulum which twists back and forth once per minute and is impulsed by the drive. The long term timing is achieved through a solar synchronizer. The synchronizer when struck by sunlight at noon on any sunny day heats up a piece of metal causing it to expand and give a mechanical impulse to the Clock's timing system to correct any error that may have accumulated since the last sunny day.

The last and most complex portion of the Clock is the display. The display has two halves; one which converts the time base of the pendulum, and the dials which we read to tell the time. The time base conversion is achieved by a new type of mechanical computer called the 'bit serial mechanical adder'. This device uses mechanical digital binary logic to convert hours from the pendulum to time spans as long as the precession of equinoxes, a nearly 26,000 year cycle which affects the visible night sky shown on the dials of the Clock. The dials show the year written in five digits, the sun position, the moon position and phase, sun-rise/set, moon-rise/set, and the current night sky in the center.

In designing the Clock many novel mechanisms came about which the Foundaiton patented and you can see listed below.

Patents within the Clock and related mechanisms:

- Astrolabe Having Rotating Rete and Plate no. 6,339,885
- Bit Serial Mechanical Adder no. 6,249,485 b1
- Weight Operated Mechanical Drive no. 6,220,394
- Winding Tower no. d440,146
- Clock Face no. d440,900
- Clock Configuration no. d440,882
- Grooved Plane For Congreve-Style Clock no. 6,097,673

Patents Pending:

- Diurnal Solar Event Triggering Mechanism 09/636001
- Differential Hoist 60/066,95

- Alexander Rose, April 02002

Design Principles for the Clock by Danny Hillis:

Longevity

With occasional maintenance, the clock should reasonably be expected to display the correct time for the next 10,000 years.

Maintainability

The clock should be maintainable with bronze-age technology.

Transparency

It should be possible to determine operational principles of the clock by close inspection.

Evolvability

It should be possible to improve the clock with time.

Scalability

It should be possible to build working models of the clock from table-top to monumental size using the same design.

Some rules that follow from the design principles:

Longevity:

Go slow

Avoid sliding friction (gears)

Avoid ticking

Stay clean

Stay dry

Expect bad weather

Expect earthquakes

Expect non-malicious human interaction

Don’t tempt thieves

Maintainability and transparency:

Use familiar materials

Allow inspection

Reherse motions

Make it easy to build spare parts

Expect restarts

Include the manual

Scalability and Evolvabilty:

Make all parts similar size

Separate functions

Provide simple interfaces

Basic Clock Modules:

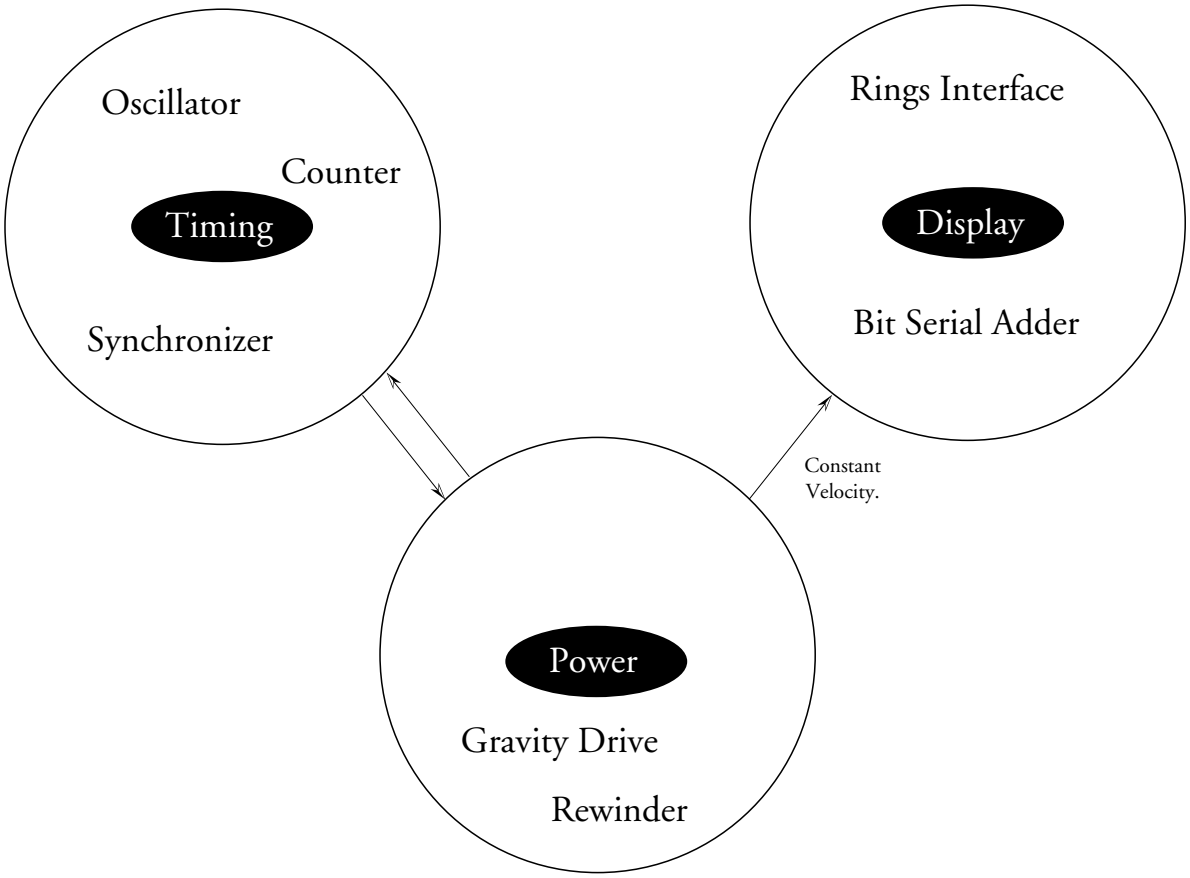

Examples:

	Clepsydra	Atomic Clock
Power	potential energy supplied by human	electricity
Time	flow rate of water	oscillation of cesium atom
Convert	lever with e.o.t. adjustment	electronic frequency divider
Display	pointer, gong	numeric display, radio

Options considered for powering the Clock:

Atomic	Poor Maintainability & Transparency
Chemical	Poor Scalability
Solar Electric	Poor Maintainability
Prestored potential energy	Poor Scalability
Water flow	Exposure to water
Wind	Exposure to weather
Geothermal	Poor Scalability
Tidal gravitational changes	Poor Scalability
Temperature change	
Pressure change	Need for bellows or seal
Seismic and plate tectonic	Poor Scalability
Human winding	Fosters responsibility

Conclusion: My current favorite is human winding because it fits with goals of clock.

Temperature change is also a viable alternative.

Options considered as sources of timing for clock:

pendulum	inaccurate
spring and mass	inaccurate
water flow	inaccurate and wet
solid material flow	inaccurate
daily temperature cycle	unreliable
seasonal temperature cycle	imprecise
tidal forces	difficult to measure
earth's rotating inertial frame	difficult to measure accurately
stellar alignment	unreliable (clouds)
solar alignment	unreliable (clouds)
atomic oscillator	too high tech, difficult to maintain
piezoelectric oscillator	too high tech, difficult to maintain
atomic decay	difficult to measure precisely
wear and corrosion	very inaccurate
marble roll	very inaccurate
diffusion	inaccurate
tectonic motion	difficult to predict and measure
orbital dynamics	difficult to scale
audio oscillator	inaccurate and difficult to measure
pressure chamber cycle	inaccurate
inertial governor	inaccurate
human ritual	too much dependence on humans

Conclusion: Since no single source does the job, use an unreliable timer to adjust an inaccurate timer, creating a phase locked loop. My current favorite combination is to use solar alignment to adjust a slow mechanical oscillator.

Options considered for the part of the Clock that converts time source to display units:

Electronics	Poor Maintainability & Transparency
Gears	Need for rational approximation
Pre computed display	Lots of calendar pages
Levers	require very slow timing source
Hydraulics	high power
Mechanical digital logic	

Conclusion: Mechanical digital logic.

Options for how to display time.

chimes	cannot sound too often
flutes or whistles	needs air power source
sweeping hand	fragile, confusing for many hands
concentric rotating dials	
balls in holes	creates collectibles
shadows, beams of light	
animation	high power

This is the one I have thought about the least. Note that there can be multiple displays, and that some display can have independent power sources.

Some options for what to display:

Display	Days per cycle
Time of Day	1
Phase of moon	29.5305882
Lunar eclipses	-6793.504897308
Season	365.242
Positions of planets	mercury 87.969 venus 224.701 earth 365.256 mars 686.980 jupiter 4331.772 saturn 10759.22
Procession of zodiac	9417404.8533435
Christian Calendar	approximates solar years
Moslem Calendar	approximates lunar years
Jewish calendar	
Chinese Calendar	
Mayan Calendar	360
day count	1
moon count	29.5305882
year count (centuries, millennia)	365.242
historical events (past and future)	

Other information to display:

future time scales

astronomical ephemeris

maintenance manual

visits to the clock

weather records

earthquake records

calendar systems

general useful knowledge

Lots of room for creativity and evolution.

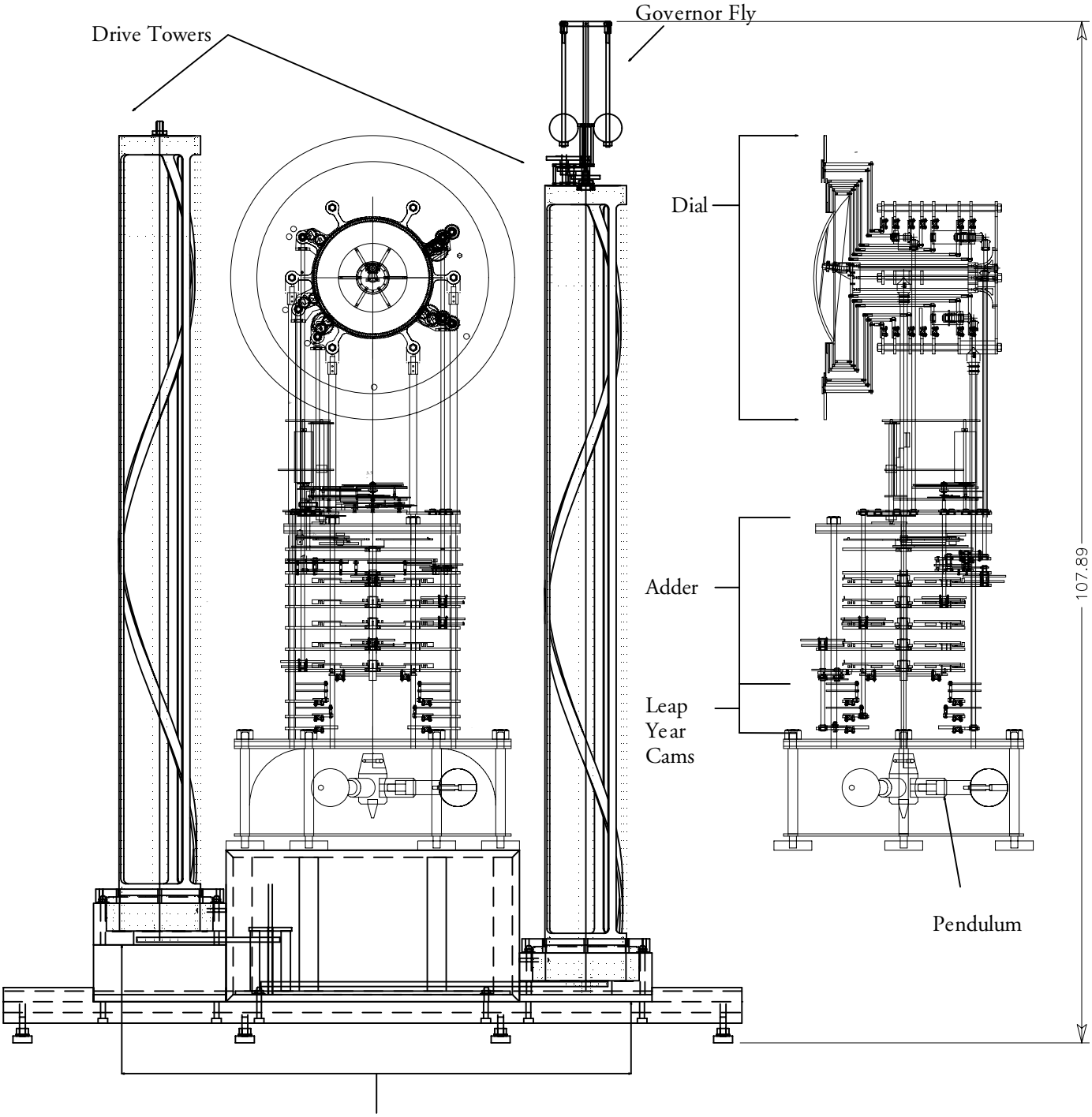

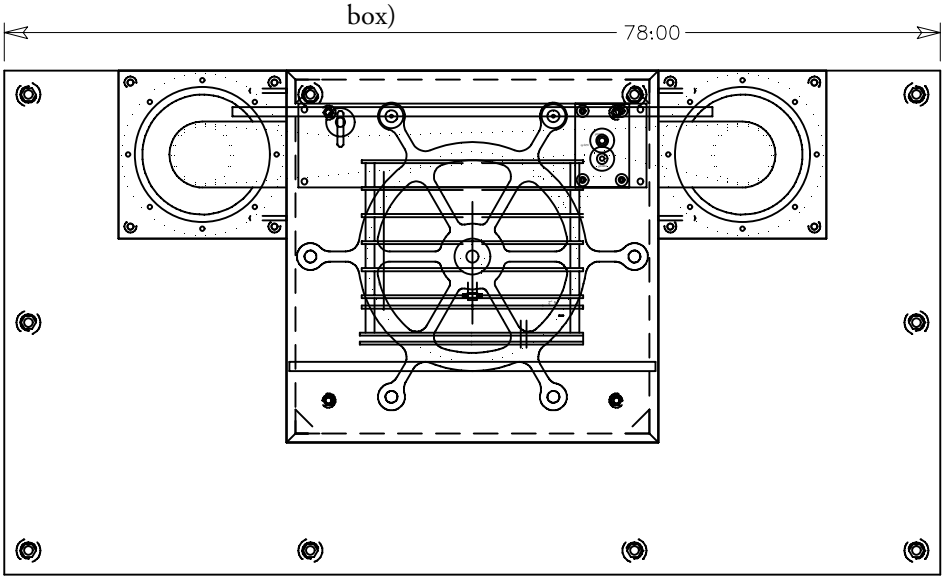

nm: whole_Assy.vlm		
sc: 1:16	dt: 01/03/00	p#.v#:
The Long Now Foundation		
tol. + / - .005 all measurements in inches		
Matl: Stainless Steel, Monel, brass, aluminum		
Qty: 1 built		

KEY
Adder Shaft -> Gear Layer

1 -> 1
2 -> 2
3 -> 5, 6 (differential)
4 -> 5, 7 (differential)
5 -> Center
6 -> 3, 4
7 -> 5

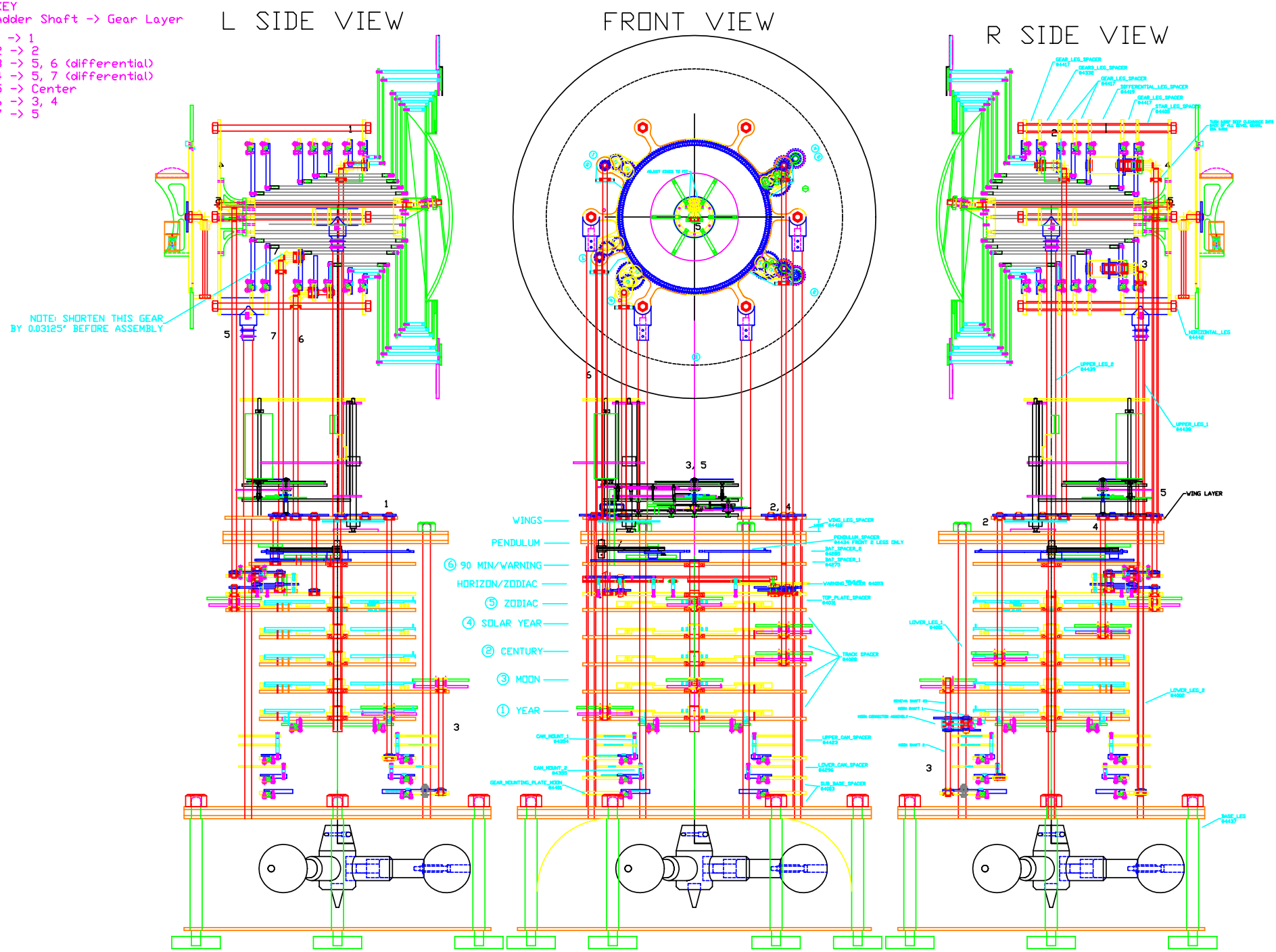

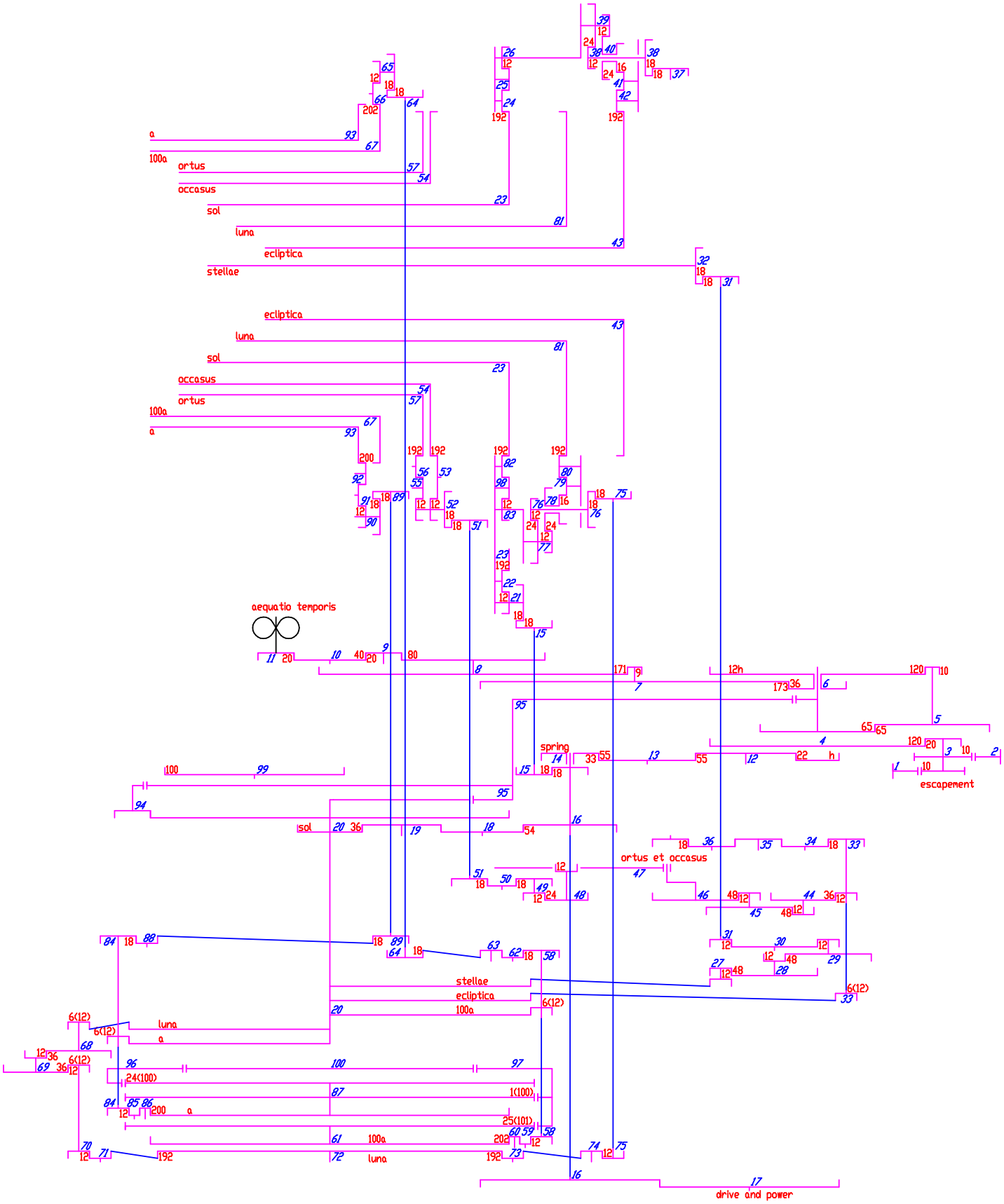

Gear Analysis by Ludwig Oechslin 02000

CALENDAR YEAR (bottom to top of each shaft listed)

Geneva1	18 T			ccw		
	idler			cw		
	18T	miter		ccw		
		miter	12T	cw		
			idler	ccw		
			idler	cw		
			200T	ccw	dial	

Geneva1	12T			ccw		
	idler			cw		
	200T			cw	cam	

CENTURY (bottom to top of each shaft listed)

Geneva2	18T			ccw	
	idler			cw	
	idler			ccw	
	18T	miter		cw	
		miter	12T	cw	
			idler	ccw	
			202T	cw	dial

also

Geneva2	12T			ccw	
	idler			cw	
	idler			ccw	
	192T			cw	cam

SUN (bottom to top of each shaft listed)

36T				cw		
idler				ccw		
idler				cw		
54T	18T			ccw		
	18T	miter		cw		
		miter	12T	cw		
			idler	ccw		
			192T	cw		

MOON (bottom to top of each shaft listed)

Geneva3	12T					ccw
	idler					cw
	192T					ccw
	idler					cw
	idler		differential			ccw
	12T	miter				cw
		miter	12T			cw
			24T	12T		ccw
				24T	16T	cw
					idler	ccw
					idler	cw
					192T	ccw

Other side of differential

192T(sun)						cw
idler						ccw
12T	arm					cw
	24T	12T				ccw
		24T	16T			cw
			idler			ccw
			192T			cw

STARFIELD (bottom to top of each shaft listed)

Geneva5	12T					ccw
	48T	12T				cw
		48T	12T			ccw
			idler			cw
			12T	miter		ccw
				miter	dial	cw

SUNRISE (bottom to top of each shaft listed)

Geneva4	12T					ccw	
	36T	12T				cw	
		48T	12T			ccw	
			48T			cw	
			cam			cw	
rack						N/A	
12T	24T					ccw (spring)	
	12T	18T				cw	
		idler				ccw	
		18T	miter			cw	
			miter	12T		cw	*check
				idler		ccw	
				idler		cw	
				192T		ccw (spring)	

SUNSET (gear train coincident with sunrise)

miter	12T					cw (spring)
	idler					ccw
	192T					cw (spring)

RETE (bottom to top of each shaft listed)

Geneva4	18T					ccw
	idler					cw
	idler					ccw
	idler		differential			cw
	18T	miter				ccw
		miter	12T			ccw
			24T	12T		cw
				24T	16T	ccw
					idler	cw
					idler	ccw
					192T	cw

Other side of differential

192T (sun)						cw
idler						ccw
idler						cw
12T	arm					ccw
	24T	12T				cw
		24T	16T			ccw
			idler			cw
			idler			ccw
			192T			cw

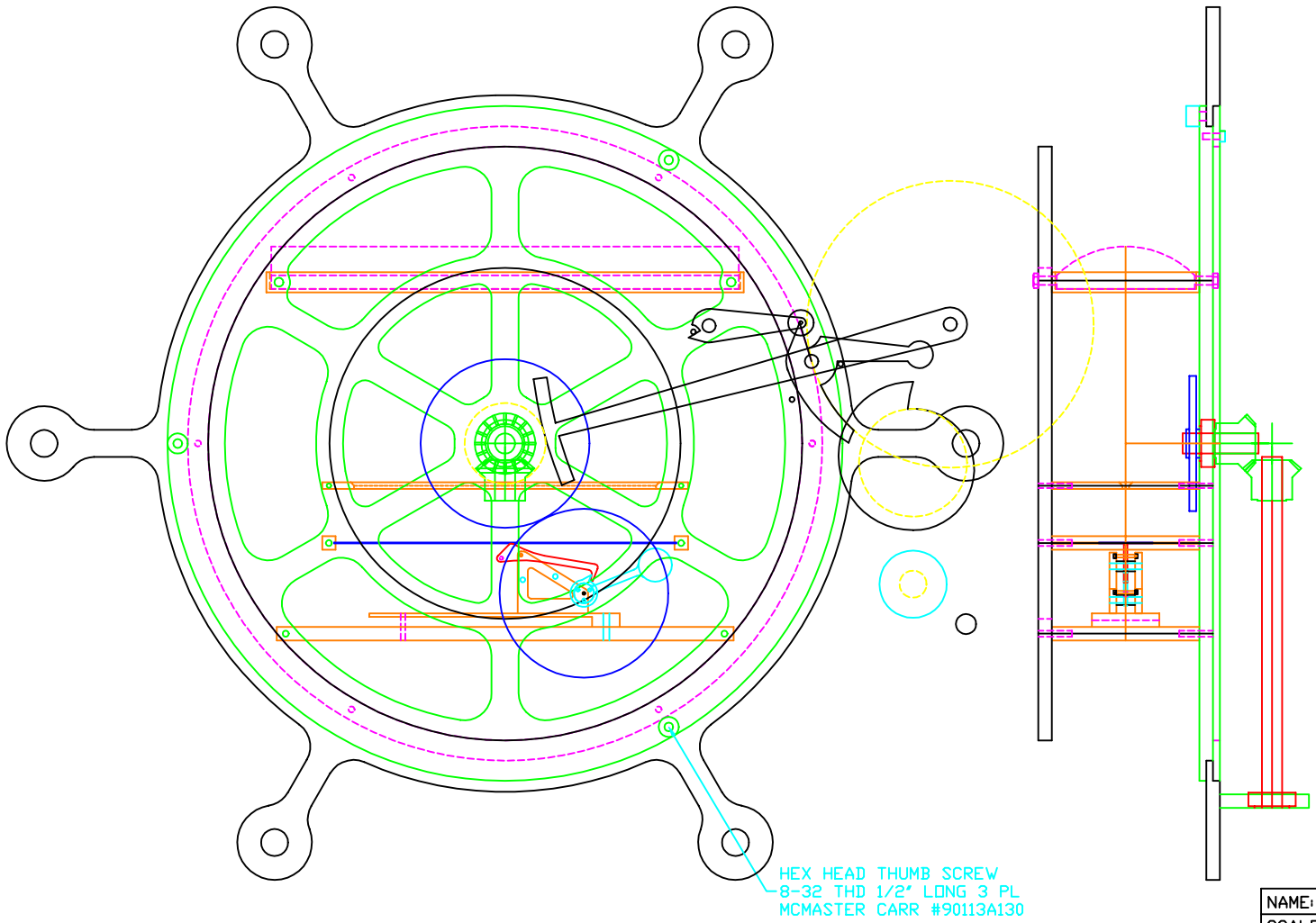

NAME: SENSOR_ASSEMBLY.DWG		
SCALE: FULL	DATE: 2-9-00	PART #: 4500.1
SHEET SIZE: D	REV.: 1	
DRAWN BY: EAW		
TOLERANCE:	UNLESS OTHERWISE SPECIFIED	
TOLERANCE HELD AFTER PLATING	ALL DIMENSIONS ARE IN INCHES	
MATL.:	QTY.:	
FINISH:	SHEET 1 OF 1	

A ratioan appoximation to the length of the tropical year (JD2000)

```
tropicalyear = 365.242189
```

365.242

```
FactorInteger[3652]
```

{{2, 2}, {11, 1}, {83, 1}}

```
N[84 100 / 23]
```

365.217

```
FactorInteger[36524]
```

{{2, 2}, {23, 1}, {397, 1}}

```
N[ 84 500 / 115]
```

365.217

```
N[107 256 / 75]
```

365.227

```
FactorInteger[365242]
```

{{2, 1}, {31, 1}, {43, 1}, {137, 1}}

```
N[62 43 137 / 1000]
```

365.242

```
FactorInteger[1000]
```

{{2, 3}, {5, 3}}

```
N[31 43 137 / (20 25) ]
```

365.242

This is how far the calader would be off after 19K yrs

$$3652420 - \int_0^{10000} (\text{tropicalyear} - 0.00000013\,y)\, dy$$

4.61

This is how far the modified revolutioanary calendar is off after 20k yrs.

$$20000\,365.24225 - \int_0^{20000} (\text{tropicalyear} - 0.00000013\,y)\,dy$$

27.22

a rational approximation for the ratio of synodic month to tropical year

```
synodicmonth = 29.5305888531 - 0.000000216T
```

$29.5306 - 2.16 \times 10^{-7}\,T$

```
synodicmonth = % /. T → d / 36525
```

$29.5306 - 5.91376 \times 10^{-12}\,d$

```
start = 36525
```

36525

```
N[365.242189 / 29.530588853]
```

12.3683

```
N[470 / 38]
```

12.3684

$$\text{solarday} = \frac{86400 - 0.0015\,T}{86400} \;/.\; T \to d \;/\; 36525$$

$$\frac{86400 - 4.10678 \times 10^{-8}\,d}{86400}$$

How far off is the month calcation? What is the best constant?

$$\text{montherror}[\text{jdays\_}] := \int_{\text{start}}^{\text{start}+\text{jdays}} 1 / (\text{synodicmonth} \;/.\; d \to (\text{start}))\,dd - \int_{\text{start}}^{\text{start}+\text{jdays}} \frac{\text{solarday}}{\text{synodicmonth}}\,dd$$

```
jcen = 3652425
```

3652425

```
montherror[jcen]
```

0.0647347

```
Fit[{{0, 0},
   {jcen / 2, ∫_start^(start + jcen/2) solarday/synodicmonth dd}, {jcen, ∫_start^(start + jcen) solarday/synodicmonth dd}},
 {1, x}, x]
```

0.0054321 + 0.0338632 x

```
newmontherror[jdays_] :=
 .007 + ∫_start^(start + jdays) 0.033863174755042884 dd - ∫_start^(start + jdays) solarday/synodicmonth dd
```

```
newmontherror[jcen]
```

0.0078695

```
Plot[Evaluate[newmontherror[x]], {x, 0, jcen}]
```

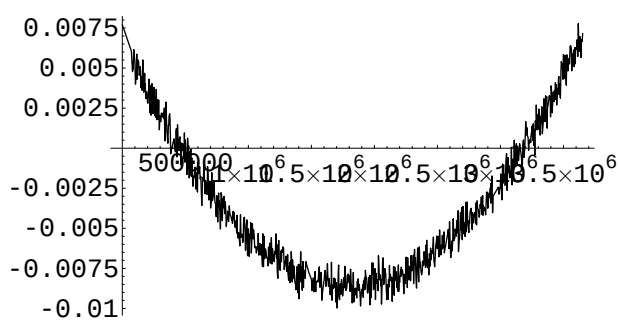

- Graphics -

■ repeating the month calcation in terms of Jcenturies

```
montherror[jcs_] :=
 ∫_1^(1 + jcs) 36525 / (29.5305888531 - 0.000000216) dT - ∫_1^(1+jcs) (36525 (86400-0.0015 T)/86400) / (29.5305888531 - 0.000000216 T) dT
```

```
montherror[100]
```

0.0646099

```
Fit[{{0, 0},
   {5, ∫_1^6 (36525 (86400-0.0015 T)/86400) / (29.5305888531 - 0.000000216 T) dT},
  {10,
    ∫_1^11 (36525 (86400-0.0015 T)/86400) / (29.5305888531 - 0.000000216 T) dT}},
 {1, x}, x]
```

0.000137612 + 1236.85 x

```
newmontherror[jcs_] :=
```

$$.000325521 + \int_1^{1+jcs} 1236.8529296875\, dT - \int_1^{1+jcs} \frac{36525\, \frac{86400-0.0015\,T}{86400}}{29.5305888531 - 0.000000216\,T}\, dT$$

```
N[1236.8529296875/36525, 10]
```

```
0.0338632
```

```
N[newmontherror[11], 10]
```

```
-0.00077752
```

```
Plot[Evaluate[newmontherror[x]], {x, 0, 10}]
```

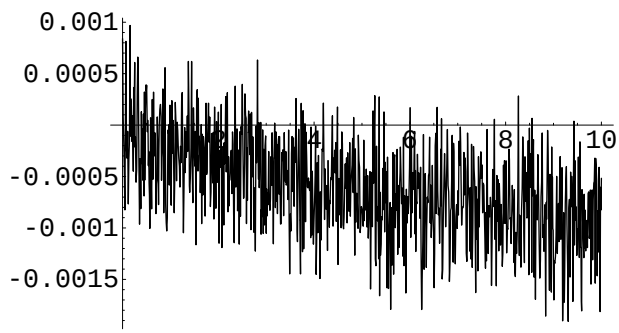


```
- Graphics -
```

■ leap year cam constants

$$\text{BaseForm}\left[N\left[\frac{256}{2\,365}, 7\right], 2\right]$$

0.01011001110001101_2

$$\text{BaseForm}\left[N\left[\frac{256}{2\,366}, 7\right], 2\right]$$

0.01011001100001111011_2

$$\text{BaseForm}\left[N\left[\frac{256}{24\,365}\, 7\right], 2\right]$$

$0.0011010001011110011101_2$

$$\text{BaseForm}\left[N\left[\frac{256}{24\,366}\, 5\right], 2\right]$$

0.0010010101001101111_2

```
Poly[x_, a_] :=
 a[[1]] + Sum[a[[i]] x^(i - 1), {i, 2, Length[a]}]


DegreesMod360[theta_] :=
 Mod[theta, 360]


RadiansToDegrees[theta_] :=
 DegreesMod360[theta / Pi 180]


DegreesToRadians[theta_] :=
 DegreesMod360[theta] Pi / 180


SinDegrees[theta_] :=
 Sin[DegreesToRadians[theta]]


CosineDegrees[theta_] :=
 Cos[DegreesToRadians[theta]]


TangentDegrees[theta_] :=
 Tan[DegreesToRadians[theta]]


ArcTanDegrees[x_, quad_] :=
 Module[{deg},
  deg = RadiansToDegrees[ArcTan[x]];
  If[quad == 1 || quad == 4, deg, deg + 180]  ]


ArcSinDegrees[x_] :=
 RadiansToDegrees[ArcSin[x]]


ArcCosDegrees[x_] :=
 RadiansToDegrees[ArcCos[x]]
```

■ This is the julian day number of Noon, Jan. 1, 2000

```
J2000 = 2451545.0
```

2.45155×10^{6}

■ equation of time

(in Julian days) (adapted from Dershowitz & Reingold)

```
EquationOfTime[jd_] :=
 Module[
  {c, longitude, anomaly, inclination, eccentricity, y},   c = (jd - J2000) / 36525;
  longitude = Poly[c, {280.46645, 36000.76983, 0.0003032}];
  anomaly = Poly[c, {357.52910, 35999.05030, -0.0001559, -0.00000048}];
  inclination = Poly[c, {23.43929111, -0.013004167, -0.00000016389, 0.0000005036}];
  eccentricity = Poly[c, {0.016708617, -0.000042037, -0.0000001236}];
  y = TangentDegrees[inclination / 2]^2;   N[(y SinDegrees[2 longitude] +
  -2 eccentricity SinDegrees[anomaly] +
  4 eccentricity y SinDegrees[anomaly]
       CosineDegrees[2 longitude] +   -0.5 y^2 SinDegrees[4 longitude] +
  -1.25 eccentricity^2 SinDegrees[2 anomaly])    / (2 Pi)]
 ]
```

```
Plot[60 24 * EquationOfTime[t], {t, J2000, J2000 + 365}]
```

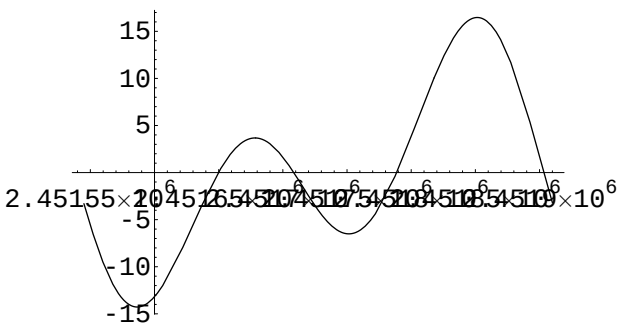

- Graphics -

■ ploting

```
<< Graphics`ParametricPlot3D`
```

- **The cam is made by wrapping the eqaution around a cylinder, with turns once a year, so that the readout slowly sprirals up the cylinder.**

```
Syntax::tsntxi : "<<1>>" is incomplete; more input is needed.
```

```
cam[y_, c_, f_] := {(2 + f) Sin[2 π y], (2 + f) Cos[2 π y], c / 10}
```

```
smallcam[y_, c_, f_] := {(1 + f) Sin[2 π y], (1 + f) Cos[2 π y], c / 10}
```

```
ParametricPlot3D[Evaluate[cam[y, c, 0]], {y, 0, 1, .05}, {c, -5, 105, 10}]
```

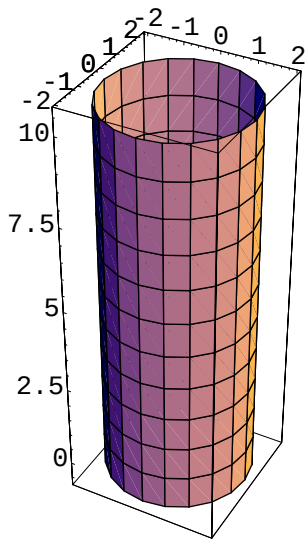


```
- Graphics3D -
```

- **The real question is the exact rotation rate (days/year)which will effect the shape and the gear train.**

```
rotrate = 365.24231
```

```
365.242
```

```
ParametricPlot3D[Evaluate[cam[y, c, 60 24/30 EquationOfTime[(c 100 + y) rotrate]]],
 {y, 0, 1, .03}, {c, -5, 105, 10}]
```

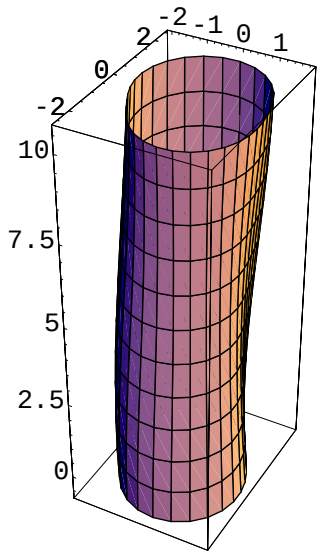

- Graphics3D -

```
rotrate = N[84 100 / 23]
```

365.217

```
ParametricPlot3D[Evaluate[cam[y, c, 60 24/30 EquationOfTime[(c 100 + y) rotrate]]],
 {y, 0, 1, .03}, {c, -5, 105, 10}]
```

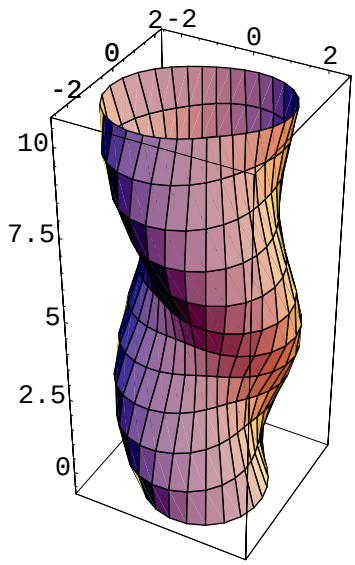

- Graphics3D -

```
rotrate = N[107 256 / 75]
```

365.227

Scale is one inch = 30 min

```
ParametricPlot3D[Evaluate[cam[y, c, 60 24/30 EquationOfTime[(c 100 + y) rotrate]]],
 {y, 0, 1, .03}, {c, -5, 105, 10}]
```

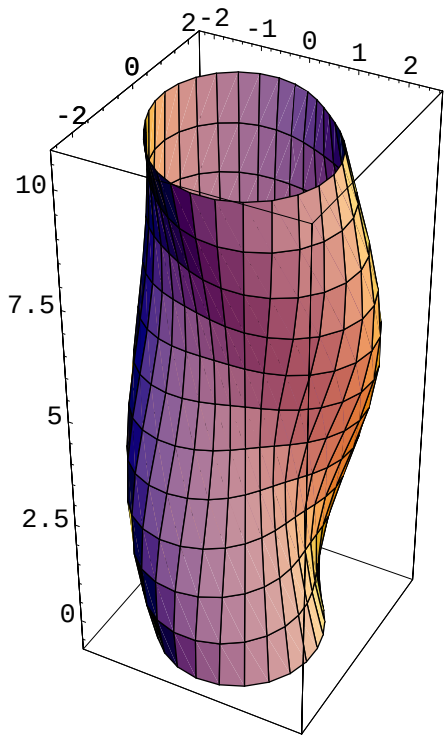

- Graphics3D -

```
rotrate = N[(105 115 83) / (14 14 14)]
```

365.242

```
ParametricPlot3D[Evaluate[cam[y, c / 5, 60 24/30 EquationOfTime[(c 100 + y) rotrate]]],
 {y, 0, 1, .03}, {c, -5, 105, 10}]
```

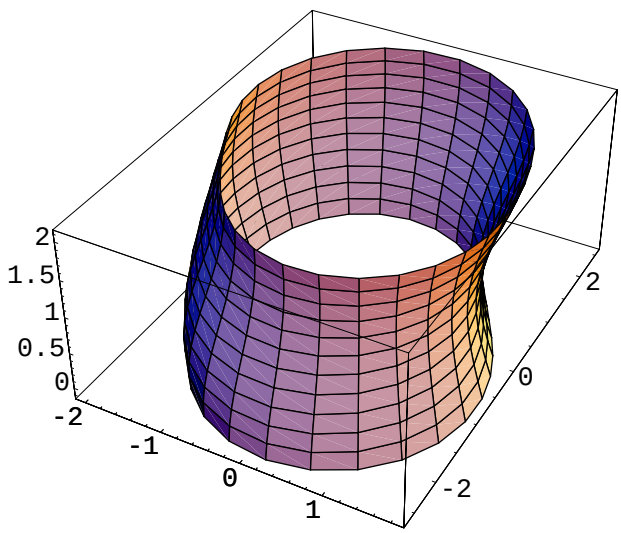

- Graphics3D -

```
disk[y_, c_, f_] := {(1 + c / 10) Sin[2 π y], (1 + c / 10) Cos[2 π y], f}
```

```
General::spell1 :
 Possible spelling error: new symbol name "disk" is similar to existing symbol "Disk".
```

```
ParametricPlot3D[Evaluate[disk[y, c / 5, 60 24/30 EquationOfTime[(c 100 + y) rotrate]]],
 {y, 0, 1, .03}, {c, -5, 105, 10}]
```

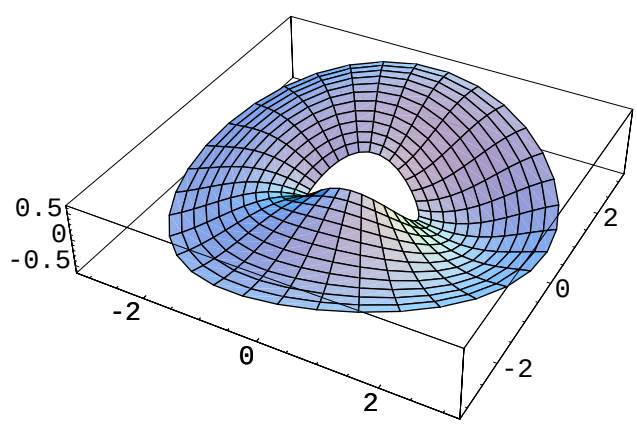

- Graphics3D -

```
FactorInteger[3652]
```

```
{{2, 2}, {11, 1}, {83, 1}}
```

- **the one below looks the most practical, dimensions are in inches**
  It needs a 1/2 inch mounting hole up through the center

```
rotrate = N[(105 115 83) / (14 14 14)]
```

```
365.242
```

```
ParametricPlot3D[Evaluate[cam[y, c / 2, 60 24/30 EquationOfTime[(c 100 + y) rotrate]]],
 {y, 0, 1, .03}, {c, -5, 105, 10}]
```

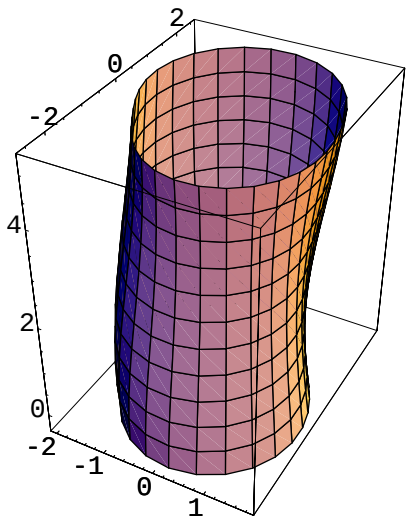


```
- Graphics3D -
```

```
ParametricPlot3D[Evaluate[smallcam[y , c / 6, 60 24/30 EquationOfTime[(c 100 + y ) rotrate ]]] ,
 {y, 0, 1, .03}, {c, -5, 275, 10}]
```

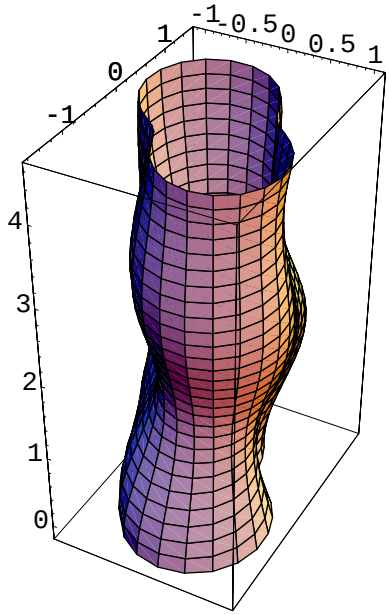

- Graphics3D -

```
ParametricPlot3D[Evaluate[smallcam[y , c / 2, 60 24/30 EquationOfTime[(c 100 + y ) rotrate ]]] ,
 {y, 0, 1, .03}, {c, -5, 105, 10}]
```

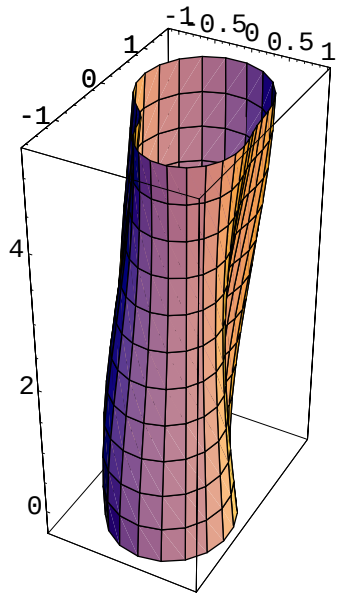

- Graphics3D -

```
rotrate = N[(171 173) / (9 9)]
```

365.222

```
ParametricPlot3D[Evaluate[cam[y, c / 2, 60 24/30 EquationOfTime[(c 100 + y) rotrate]]] ,
 {y, 0, 1, .03}, {c, -5, 105, 10}]
```

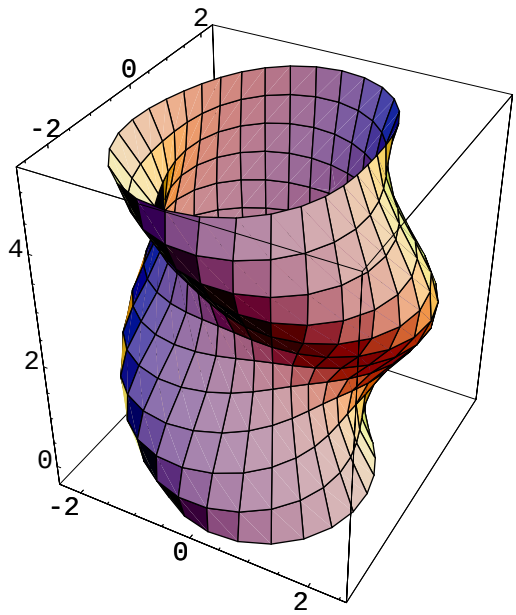

- Graphics3D -

■ Here is a smaller one:

```
ParametricPlot3D[Evaluate[smallcam[y, c / 2, 60 24/60 EquationOfTime[(c 100 + y) rotrate]]],
 {y, 0, 1, .03}, {c, -5, 105, 10}]
```

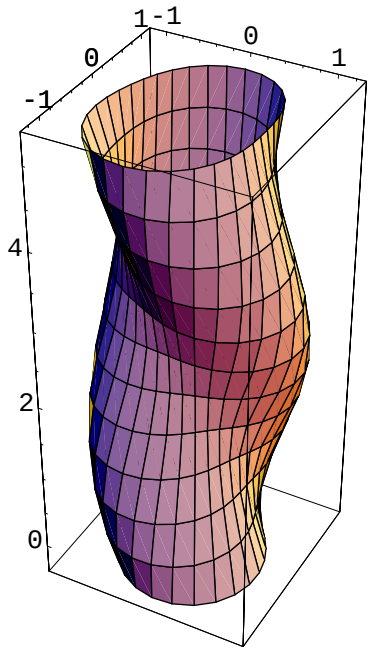

- Graphics3D -

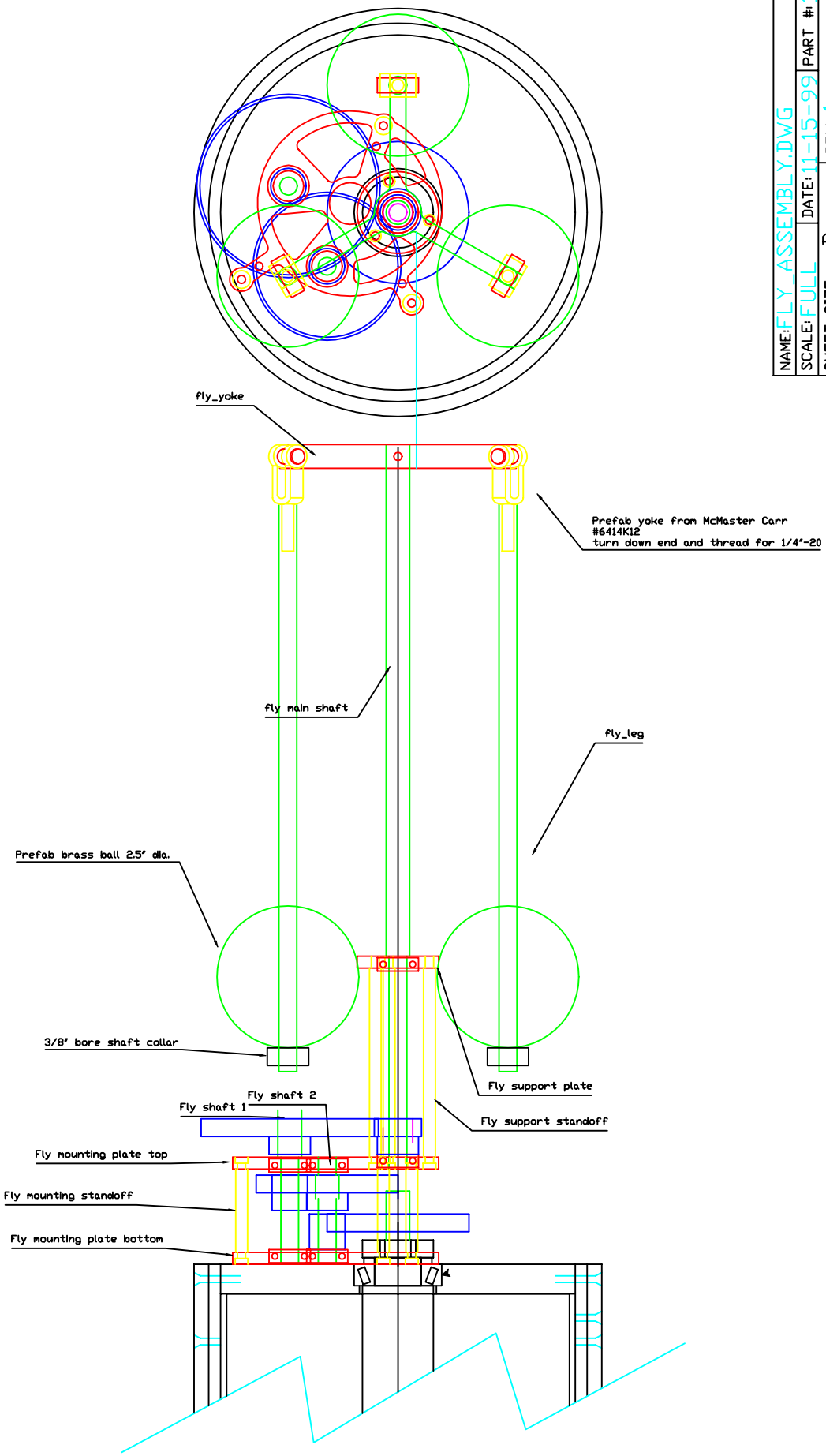

NAME: FLY_ASSEMBLY.DWG			
SCALE: FULL	DATE: 11-15-99	PART #: 1600.1	
SHEET SIZE: D	REV.: 1		
DRAWN BY: EAW			
TOLERANCE:	UNLESS OTHERWISE SPECIFIED		
TOLERANCE HELD AFTER PLATING	ALL DIMENSIONS ARE IN INCHES		
MATL.:	QTY.:		
FINISH:	SHEET 1 OF 1		

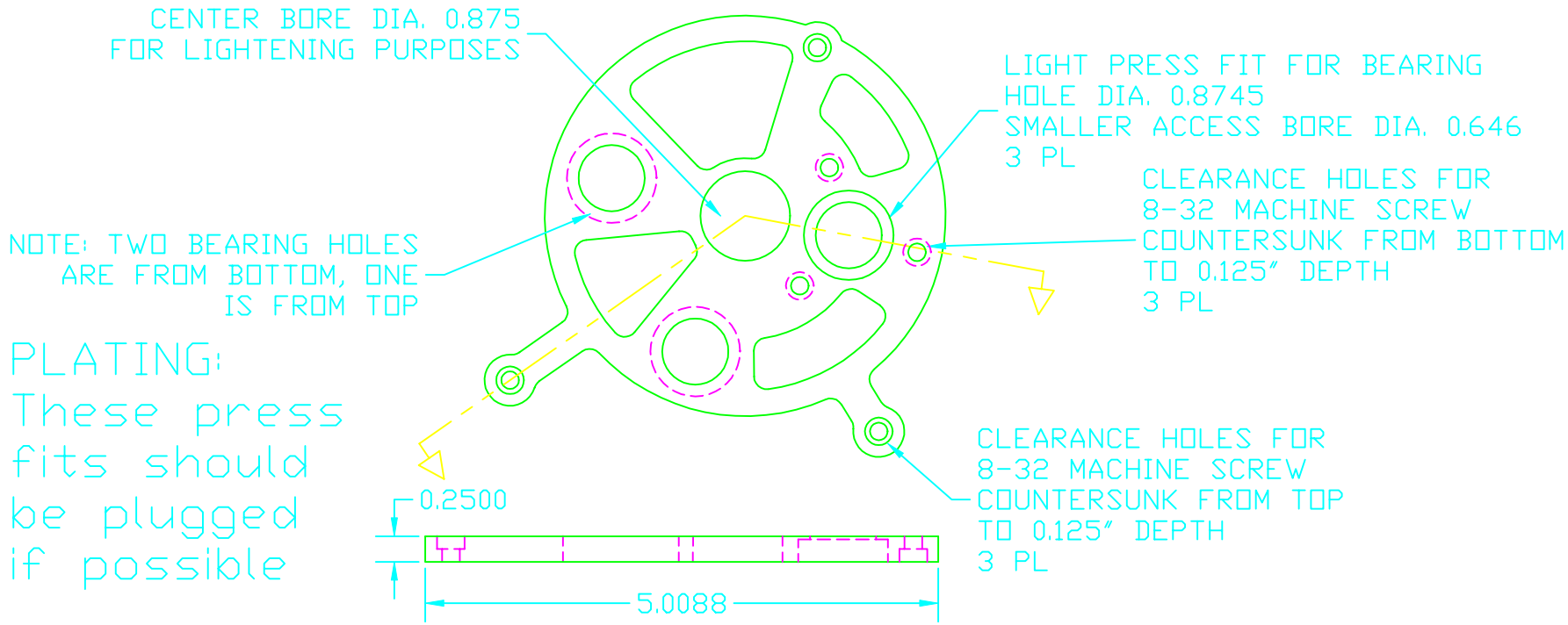

NAME: FLY_MTG_PLATE_TOP.DWG		
SCALE: FULL	DATE: 11-12-99	PART #: 1602.1
SHEET SIZE: B	REV.: 1	
DRAWN BY: EAW		
TOLERANCE: ±0.005	UNLESS OTHERWISE SPECIFIED	
TOLERANCE HELD AFTER PLATING	ALL DIMENSIONS ARE IN INCHES	
MATL.: MONEL	QTY.: 1	
FINISH: DEBURR EDGES	SHEET 1 OF 1	

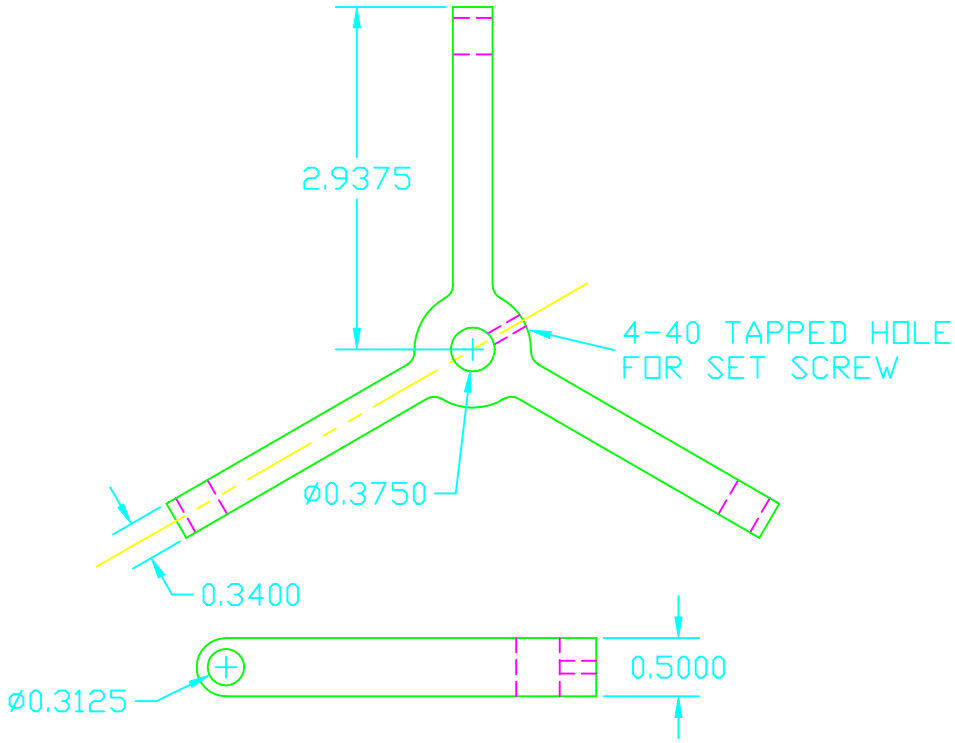

PLATING: All holes should be plugged.

NAME: FLY_YOKE.DWG		
SCALE: FULL	DATE: 11-12-99	PART #: 1609.1
SHEET SIZE: B	REV.: 1	
DRAWN BY: EAW		
TOLERANCE: ±0.005	UNLESS OTHERWISE SPECIFIED	
TOLERANCE HELD AFTER PLATING	ALL DIMENSIONS ARE IN INCHES	
MATL.: ALUMINUM	QTY.: 1	
FINISH: DEBURR EDGES	SHEET 1 OF 1	

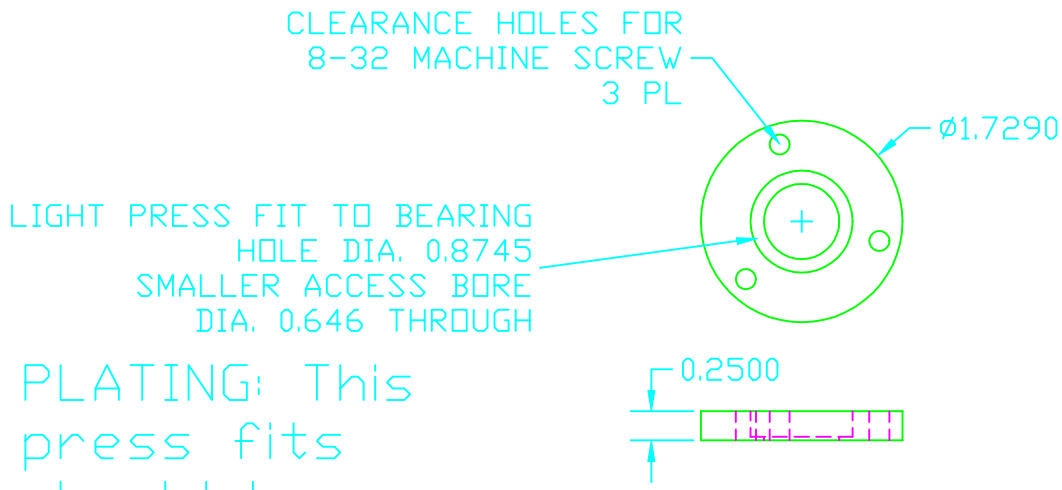

PLATING: This press fits should be plugged if possible

NAME: FLY_SUPPORT_PLATE.DWG		
SCALE: FULL	DATE: 11-12-99	PART #: 1607.1
SHEET SIZE: B	REV.: 1	
DRAWN BY: EAW		
TOLERANCE: ±0.005	UNLESS OTHERWISE SPECIFIED	
TOLERANCE HELD AFTER PLATING	ALL DIMENSIONS ARE IN INCHES	
MATL.: MONEL	QTY.: 1	
FINISH: DEBURR EDGES	SHEET 1 OF 1	

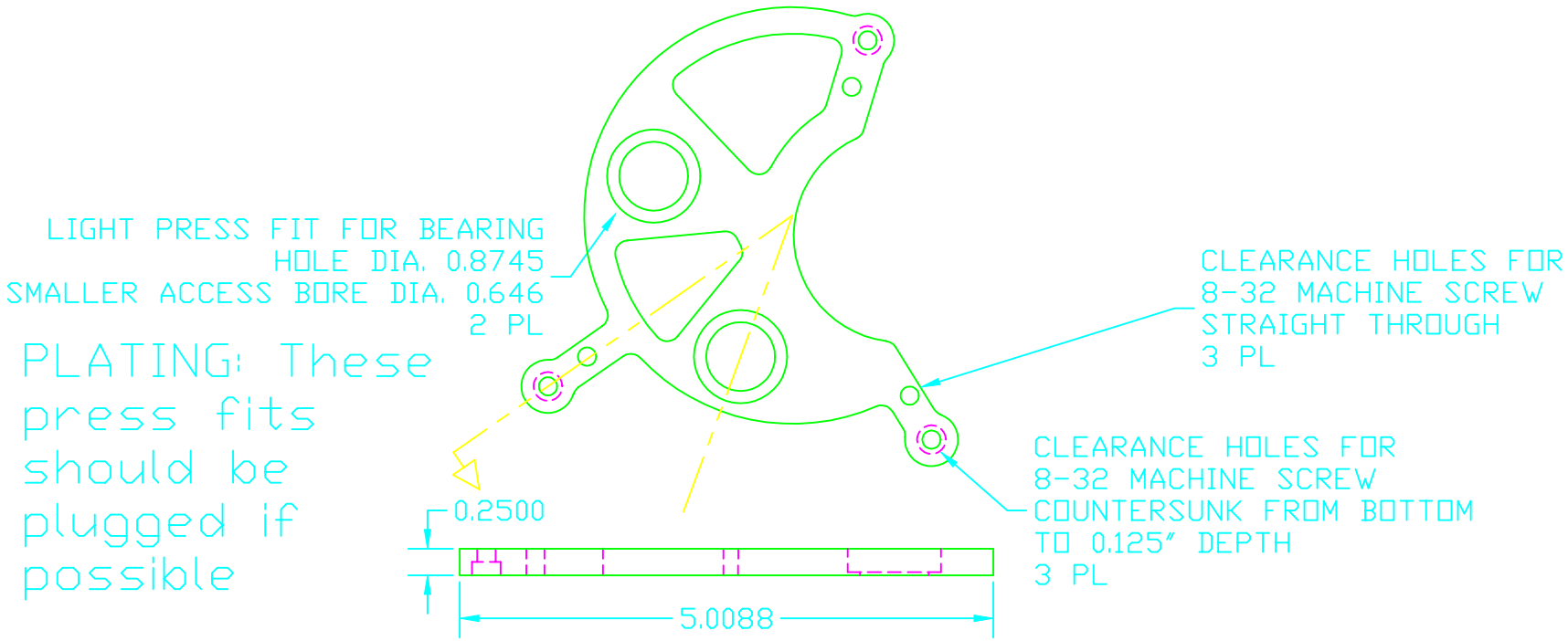

NAME: FLY_MTG_PLATE_BOTTOM.DWG		
SCALE: FULL	DATE: 11-12-99	PART #: 1601.1
SHEET SIZE: B	REV.: 1	
DRAWN BY: EAW		
TOLERANCE: ±0.005	UNLESS OTHERWISE SPECIFIED	
TOLERANCE HELD AFTER PLATING	ALL DIMENSIONS ARE IN INCHES	
MATL.: MONEL	QTY.: 1	
FINISH: DEBURR EDGES	SHEET 1 OF 1	

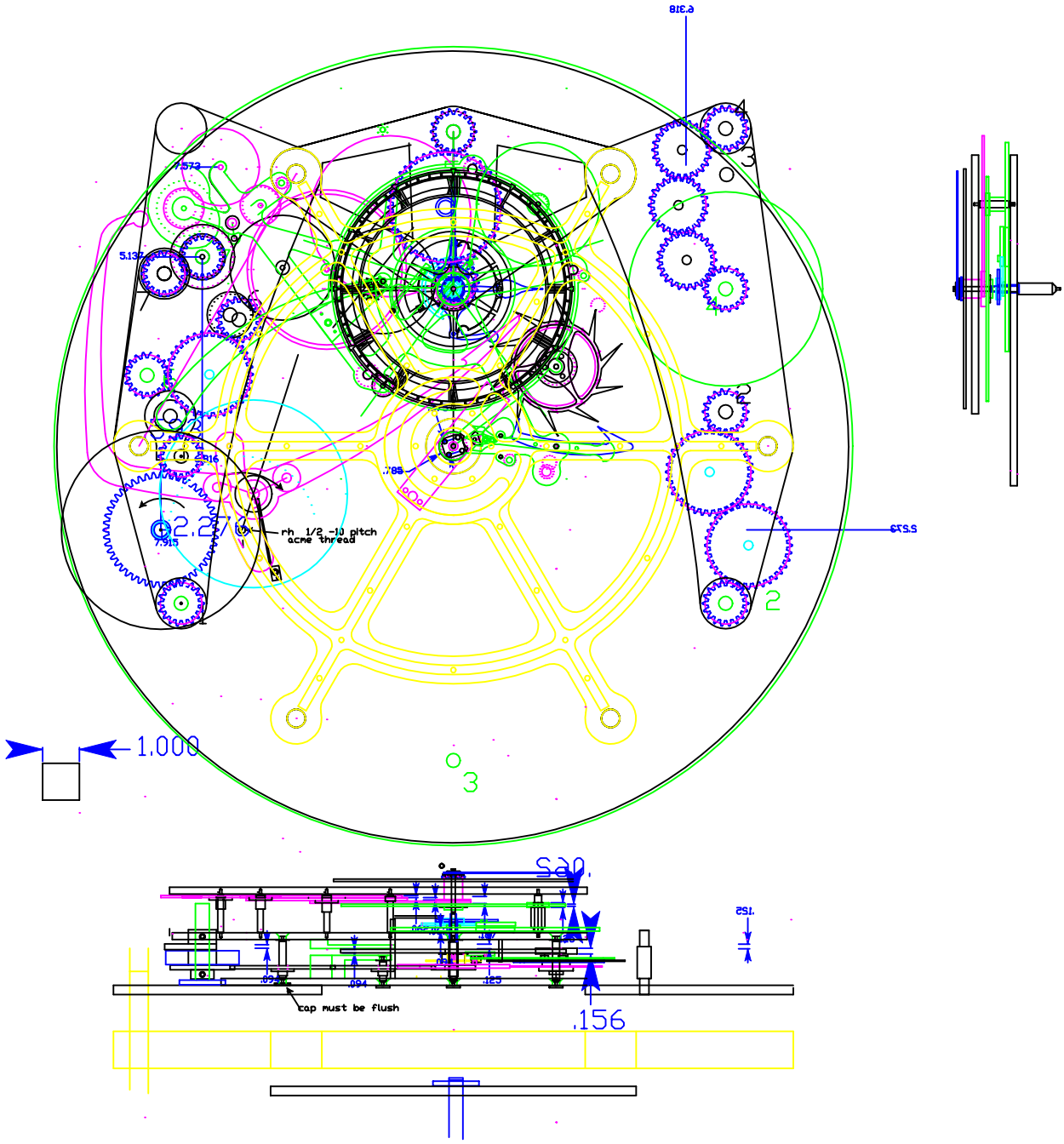

movement layout
David Munro

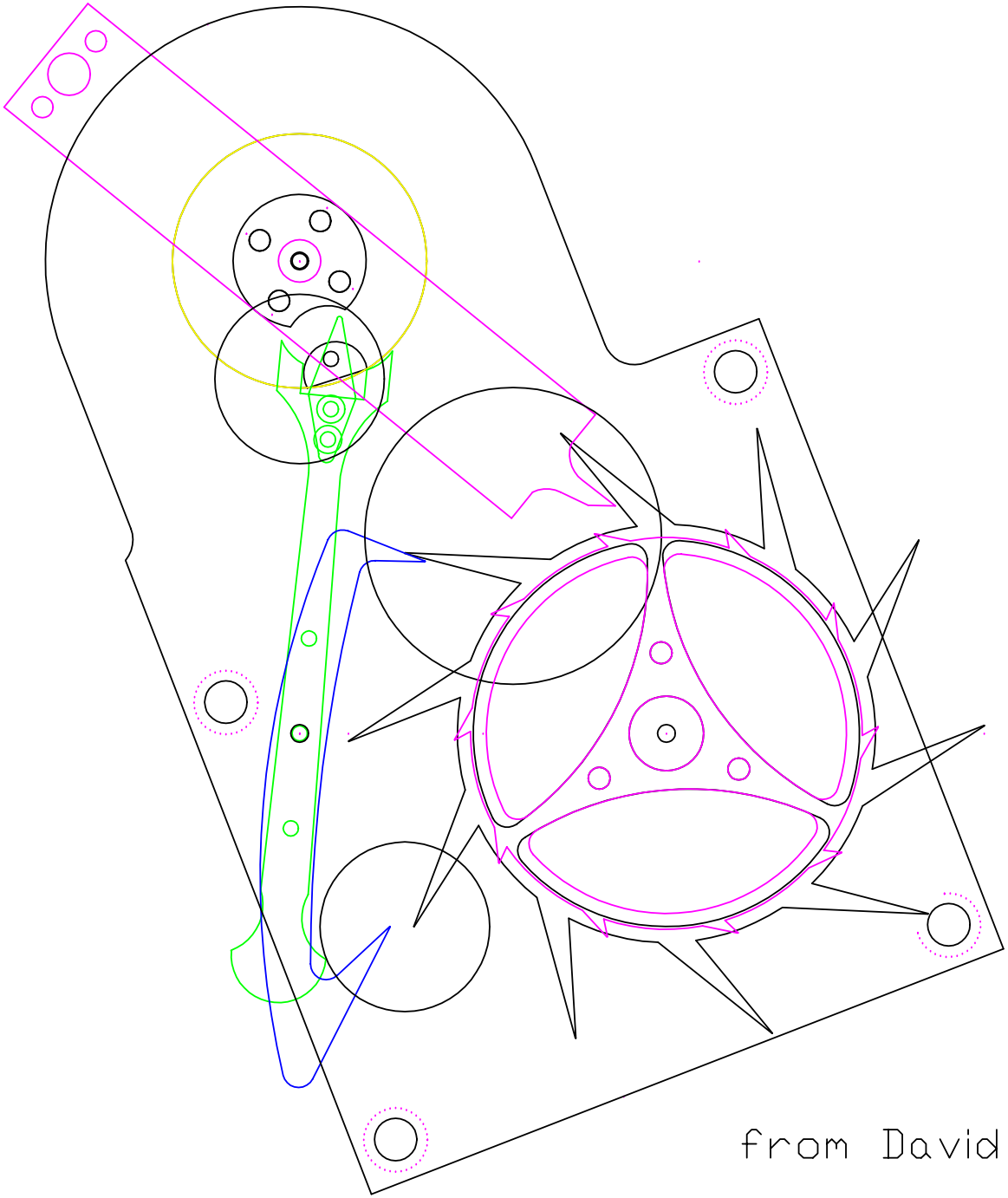

from David Munro on 5/6/99

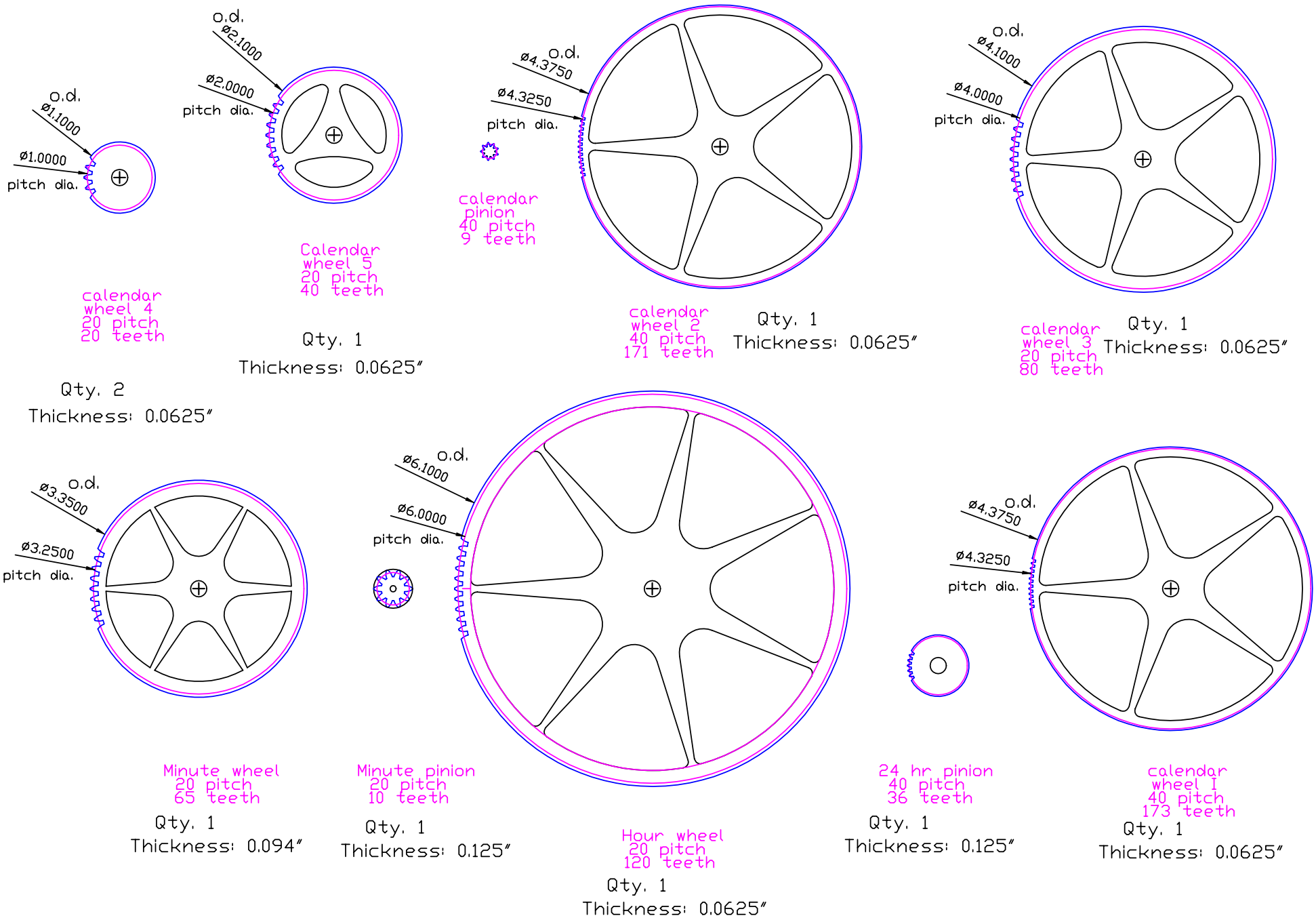
o.d.
ø1.1000
ø1.0000
pitch dia.
calendar
wheel 4
20 pitch
20 teeth
Qty. 2
Thickness: 0.0625″
o.d.
ø2.1000
ø2.0000
pitch dia.
Calendar
wheel 5
20 pitch
40 teeth
Qty. 1
Thickness: 0.0625″
o.d.
ø4.3750
ø4.3250
pitch dia.
calendar
pinion
40 pitch
9 teeth
calendar
wheel 2
40 pitch
171 teeth
Qty. 1
Thickness: 0.0625″
o.d.
ø4.1000
ø4.0000
pitch dia.
calendar
wheel 3
20 pitch
80 teeth
Qty. 1
Thickness: 0.0625″
o.d.
ø3.3500
ø3.2500
pitch dia.
Minute wheel
20 pitch
65 teeth
Qty. 1
Thickness: 0.094″
o.d.
ø6.1000
ø6.0000
pitch dia.
Minute pinion
20 pitch
10 teeth
Qty. 1
Thickness: 0.125″
Hour wheel
20 pitch
120 teeth
Qty. 1
Thickness: 0.0625″
24 hr pinion
40 pitch
36 teeth
Qty. 1
Thickness: 0.125″
o.d.
ø4.3750
ø4.3250
pitch dia.
calendar
wheel I
40 pitch
173 teeth
Qty. 1
Thickness: 0.0625″

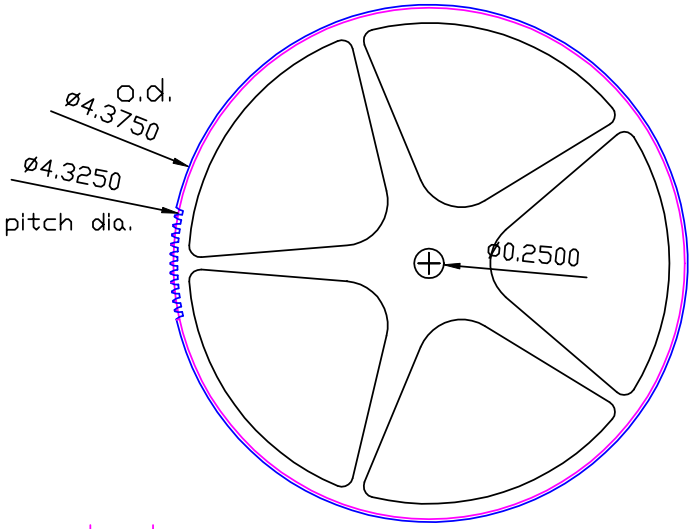

calendar
wheel 2
40 pitch
171 teeth

Qty. 1
Thickness: 0.0625", no hub

The Long Now Foundation
Attn: Liz Woods
818-544-4734
Fax 818-544-7411
All gears AGMA quality 8
Material: 360 brass
20 degree pressure angle

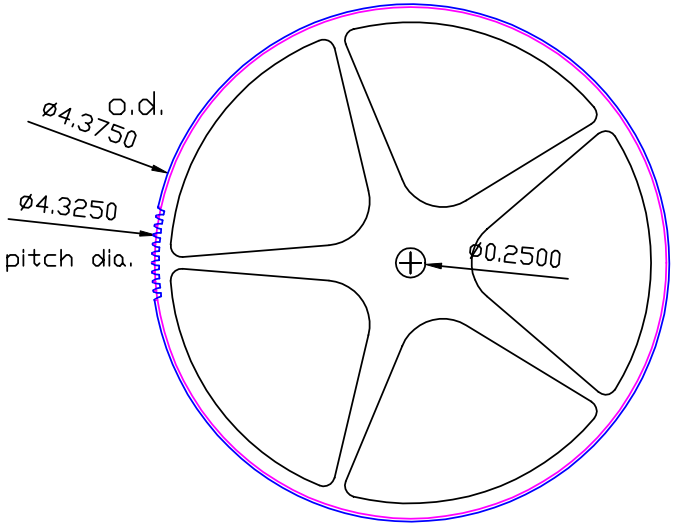

Note: Blank part for 9 tooth pinion can be provided, or entire part can be machined from pinion wire. Please quote both ways.

calendar
pinion
40 pitch
9 teeth

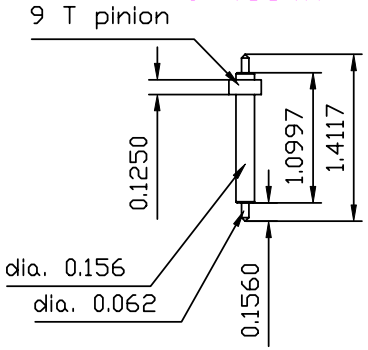

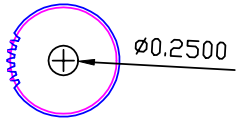

24 hr pinion
40 pitch
36 teeth

Qty. 1
Thickness: 0.125", no hub

calendar
wheel I
40 pitch
173 teeth

Qty. 1
Thickness: 0.0625", no hub

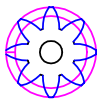

Intermediate pinion
20 pitch
8 tooth

Qty. 1 Thickness: 0.25"

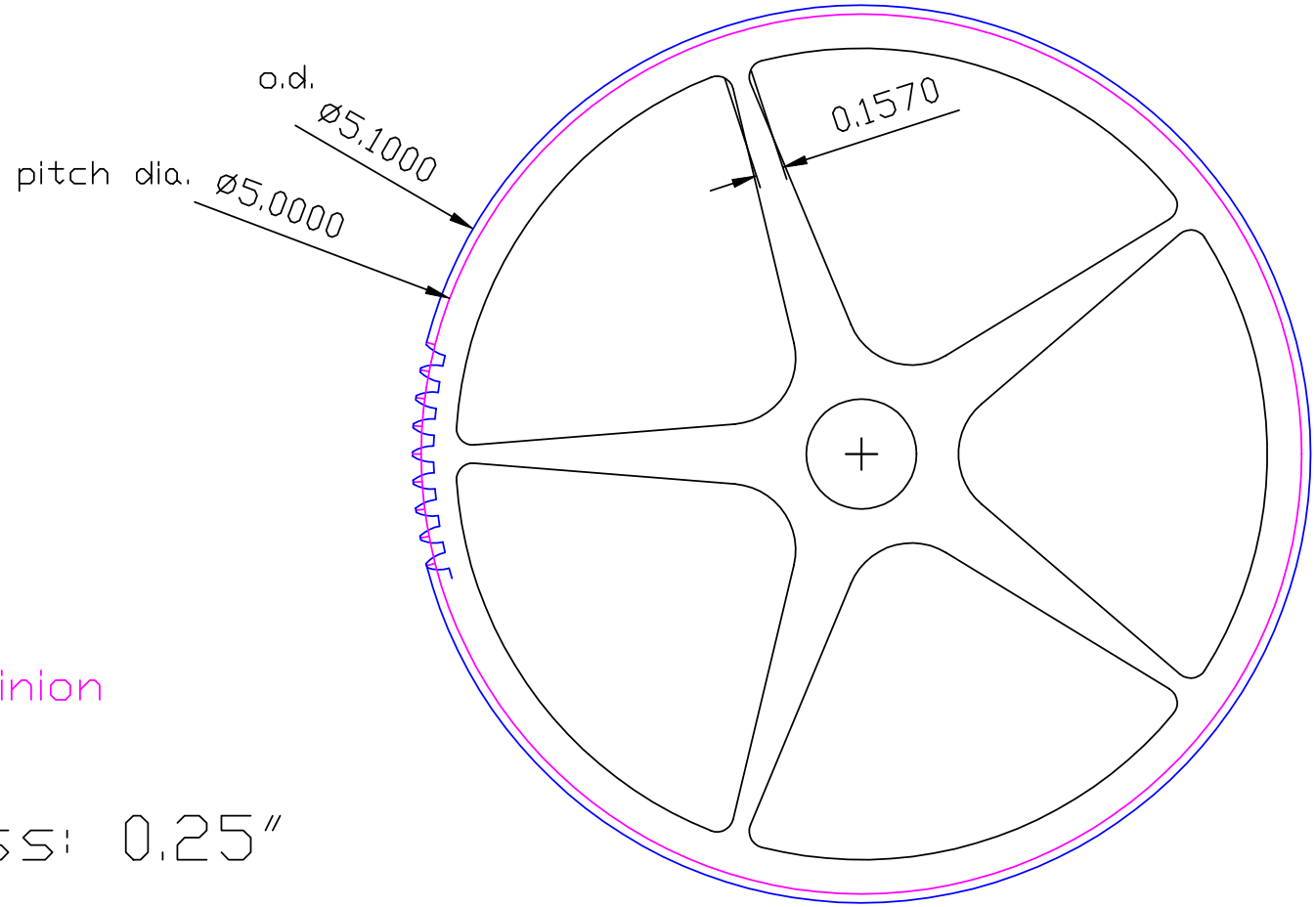

200 year wheel
20 pitch
100 tooth

Qty. 1 Thickness: 0.094"

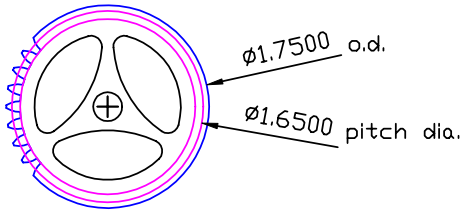

90 minute wheel
20 pitch
33 tooth

Qty. 1
Thickness: 0.125″

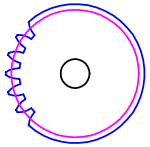

Center pinion
20 pitch
22 tooth

Qty. 1
Thickness: 0.125″

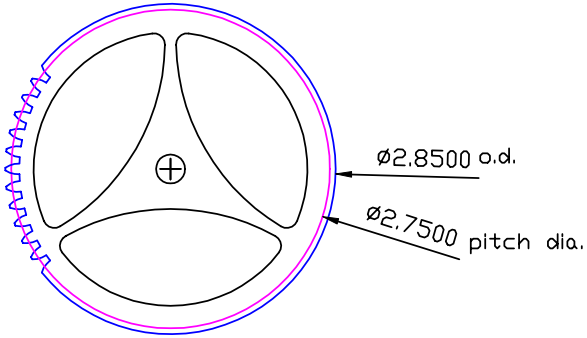

1st & 2nd train idlers
20 pitch
55 tooth

Qty. 2
Thickness: 0.094″

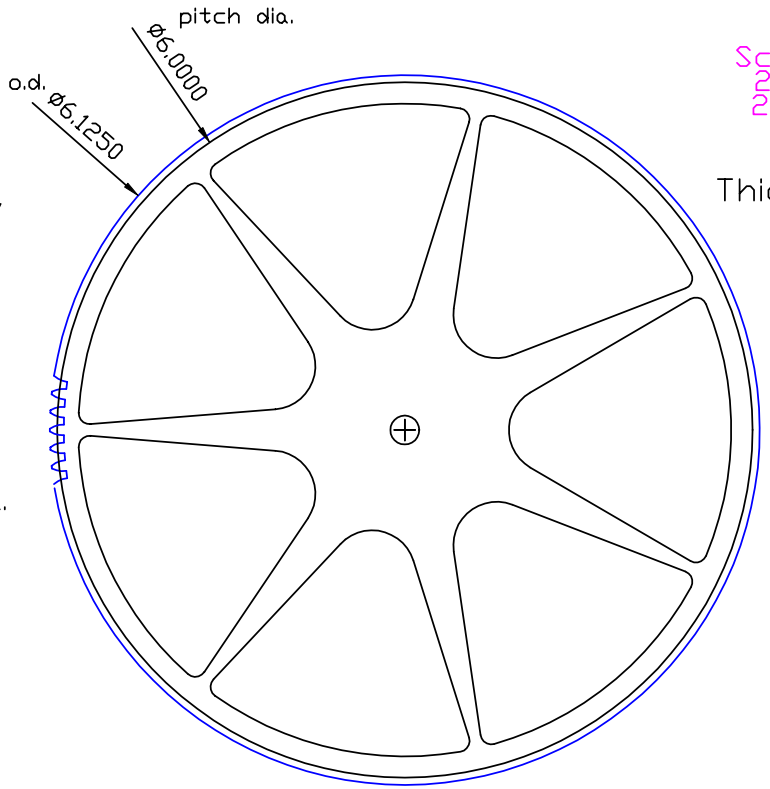

Center wheel
20 pitch
120 tooth Qty. 1
Thickness: 0.094″

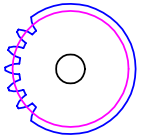

Scape pinion
20 pitch
20 tooth

Qty. 1
Thickness: 0.156″

	A	B	C	D	E	F	G	H	I
1	Train calculations Long Now clock by David Munro								
2	Wheel	#	Pitch	cd	pd	od	add*2	rotation	period
3	90 minute wheel	33			1.650	1.750	0.100	ccw	.666/hr
4	ratio =	1.67	20.0000	2.200					
5	1st train idler	55			2.750	2.850	0.100	cw	whatever
6	ratio =	1.00	20.0000	2.750					
7	2nd train idler	55			2.750	2.850	0.100	ccw	whatever
8		0.40	20.0000	1.925					
9	center pinion	22			1.100	1.200	0.100	cw	1/hr
10	center wheel	120			6.000	6.100	0.100	cw	1/hr
11	ratio =	6.00	20.0000	3.500					
12	scape pinion	20			1.000	1.100	0.100		6/hr
13	Scape wheel	10							
14	fly pinion	10	20	3.250	0.500	0.6	0.100		
15	12 hour pinion	36			0.900	0.950	0.050		2/day
16	ratio =	4.80556	40.0000	2.613					
17	annual int. wheel	173.00			4.325	4.375	0.050		
18	ratio =	19.22	40.0000	2.275					
19	annual int. pin	9			0.225	0.275	0.050		
20	ratio =	19.00000	40.0000	2.250					
21	annual wheel	171.00			4.275	4.325	0.050		
22	annual driver	80			4.000	4.100	0.100		
23	ratio =	4.00	20.0000	2.500					
24	annual idler	20			1.000	1.100	0.100		
25	annual ratio	365.22222							
26	ratio =	9.13	20.0000	1.000					
27	2nd annual idler	40			2.000	2.100	0.100		
28	ratio =	2.00	20.0000	1.500					
29	3rd annual dial	20			1.000	1.100	0.100		
30	mean cannon pinion	65			3.250	3.350	0.100	cw	1/hr
31	ratio =	1.00	20.0000	3.250					
32	Minute wheel	65			3.250	3.350	0.100	ccw	1/hr
33	Minute pinion	10			0.500	0.600	0.100	ccw	1/hr
34	ratio =	12.00	20.0000	3.250					
35	Hour wheel	120			6.000	6.100	0.100	cw	.0833/hr
36									
37	Pinion 1	18			1.125	1.250	0.125		
38		2.66667	16.0000	2.063					
39	Idler1 wheel	48.00			3.000	3.125	0.125	33.33333	ratio
40	idler 1 pinion	8			0.400	0.500	0.100		
41		12.50000	20.0000	2.700					
42	200 year wheel	100.00			5.000	5.100	0.100		
43	train count	120.00							
44									
45	90 min wheel	54			3.375	3.500	0.125		
46	ratio =	0.89	16.0000	3.188					
47	first idler	48			3.000	3.125	0.125		
48	ratio =	1.00	16.0000	3.000					
49	second idler	48			3.000	3.125	0.125		
50	ratio =	0.75	16.0000	2.625					
51	"center" pinion	36			2.250	2.375	0.125		
52									
53	"center" wheel	200			12.500	12.625	0.125		
54	ratio =	0.10	16.0000	6.875					
55	warning pinion	20			1.250	1.375	0.125		

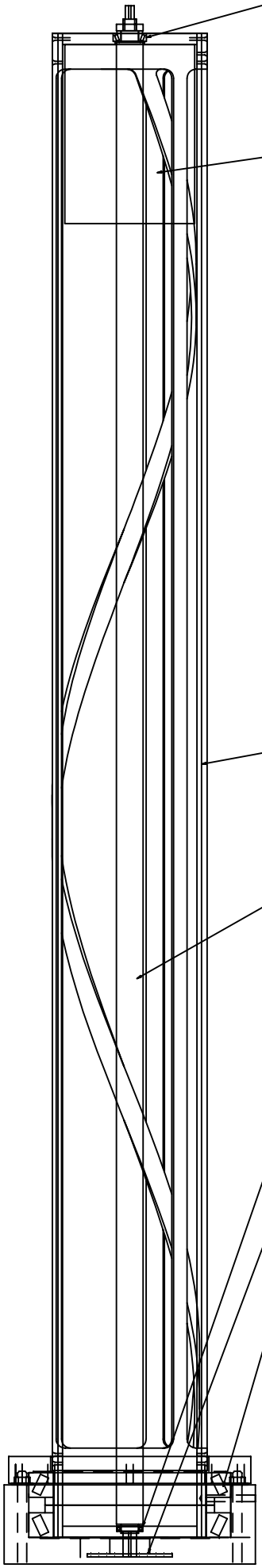

SKF .9843" bore, 1.8504" OD, .5906" H.
p#32005 X p.496 in general cat.

10" tall weight

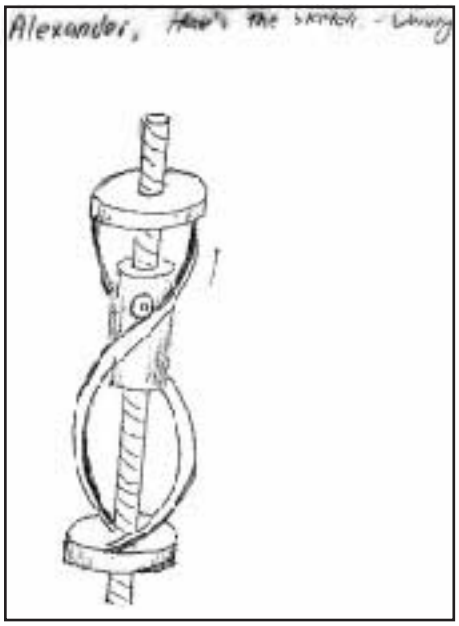

Outter cage: 8" ID (7.996) sch-40 Stainless Pipe with ~.322" wall, 8.625 OD.

Outter Spiral: 8"OD stainless tube with .25" wall, 7.5 ID. (both from Gately Stainless, John 415-822-6550, cage and spiral cut by 4th axis laser at Donal Machine.)

BSA screw 1.5" root D with 2" lead. p#PR1520 (std screw) 66"travel 72"overall, nut p#PR1520-2, flange p#1501-3. (BSA 800-882-8857, Ritchie)

SKF .9843" bore, 1.4567" OD, .2756" H.
p#61805 p.156 in general cat.

Stainless #35 sprocket.

Timken LM742749, LM74742710. 8.5" bore, 11.25" OD, 1.8125" H. p#297.

nm: 8"Helix_Assy.side		
sc: 1:8.5	dt: 11/16/99	p#.v#: 4700.5
The Long Now Foundation		
tol. +/- .005 to be held after plating		
Matl: Stainless Steel, Monel, brass, aluminum		
Qty: 2		

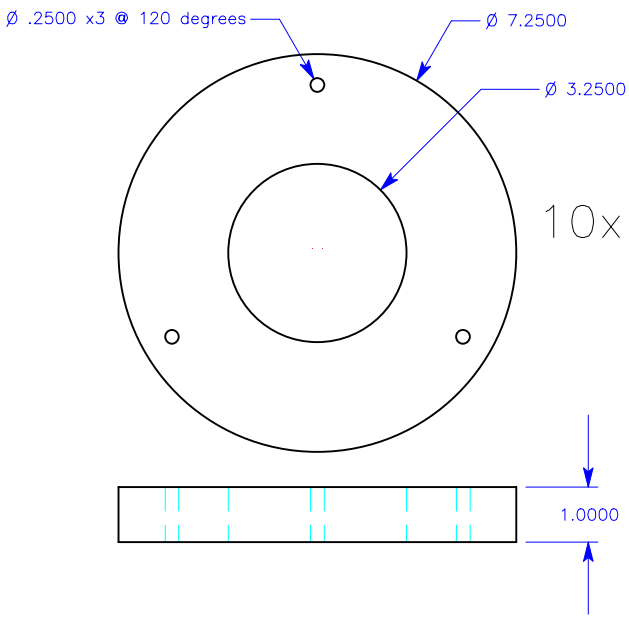

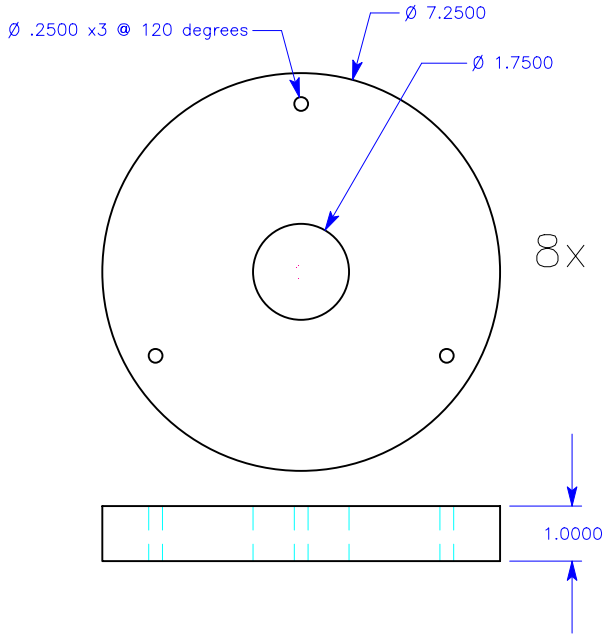

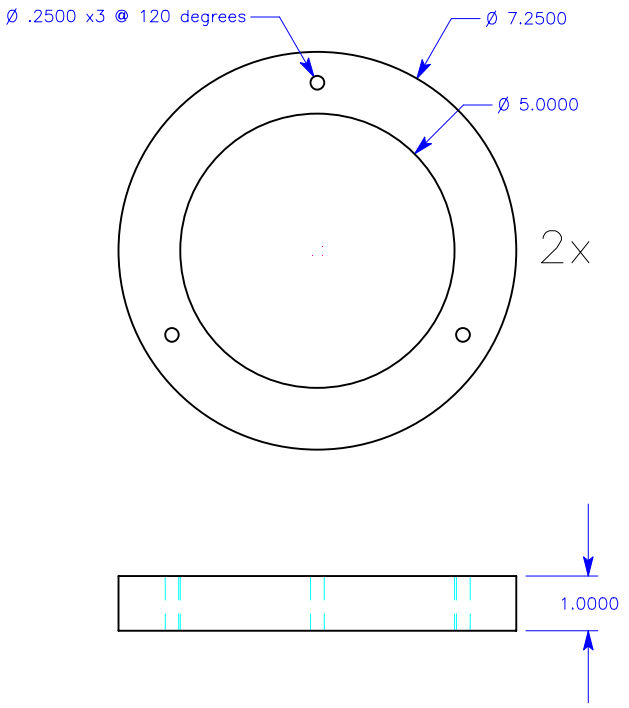

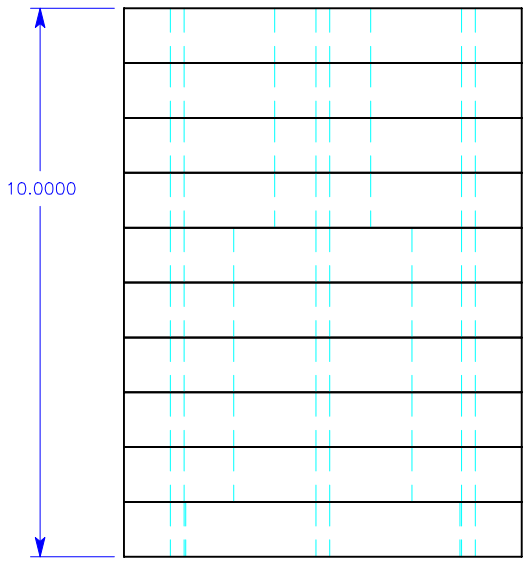

note: Pie shaped opening are for aesthetic improvement and weight reduction. Tolerances here are not as critical. They have 1.25" wide spokes. Their internal corners are radiused to .25".

nm: DriveWeights.VLM		
sc: 1:3.5	dt: 12/14/99	p#: 1107.2
The Long Now Foundation		
tol. +/-.005		
Matl: Brass		
Qty: 2 assemblies (numbers noted for 2 assy's)		

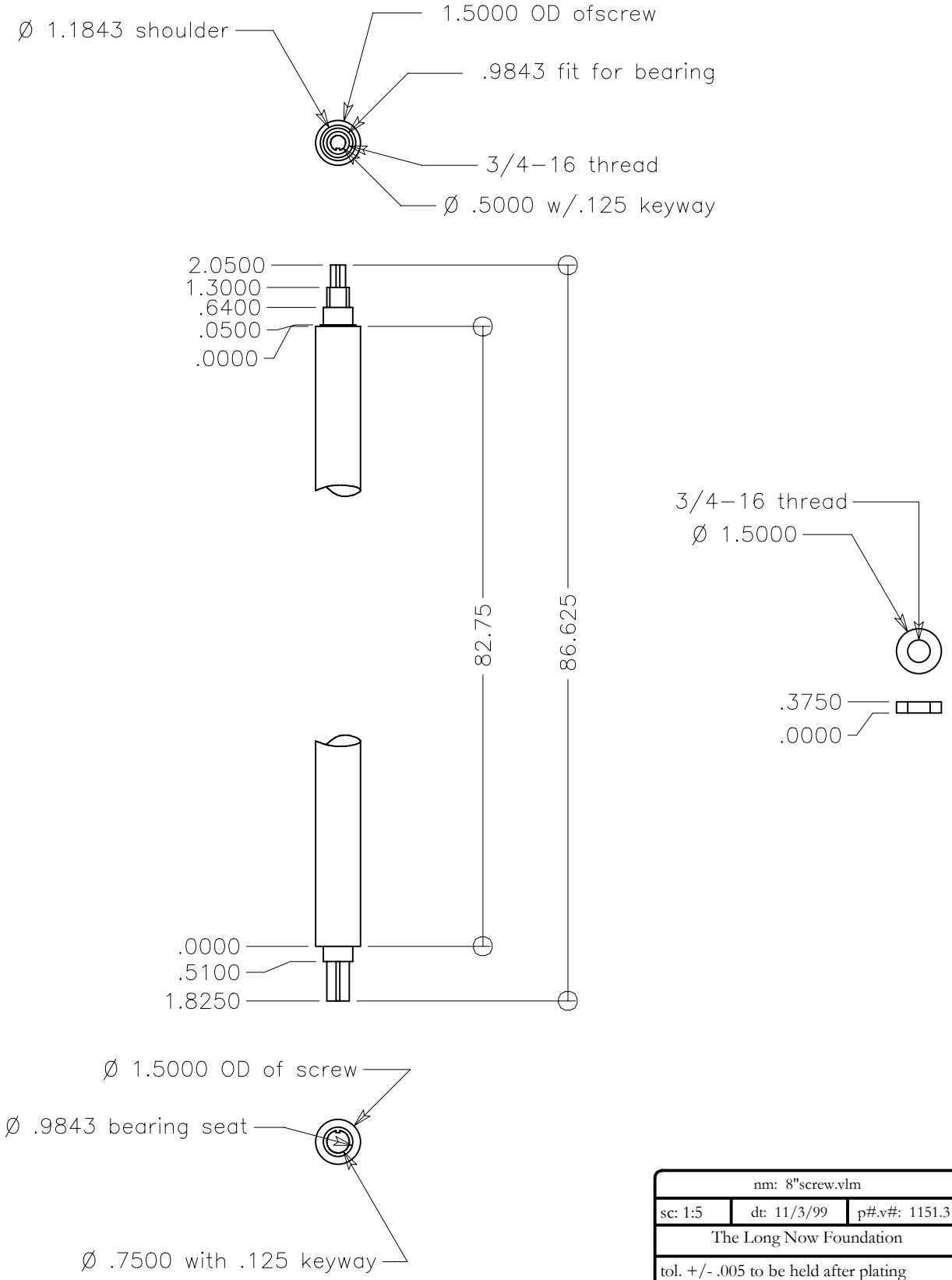

nm: 8"screw.vlm		
sc: 1:5	dt: 11/3/99	p#.v#: 1151.3
The Long Now Foundation		
tol. +/- .005 to be held after plating		
Matl: Steel		
Qty: 2 each required		

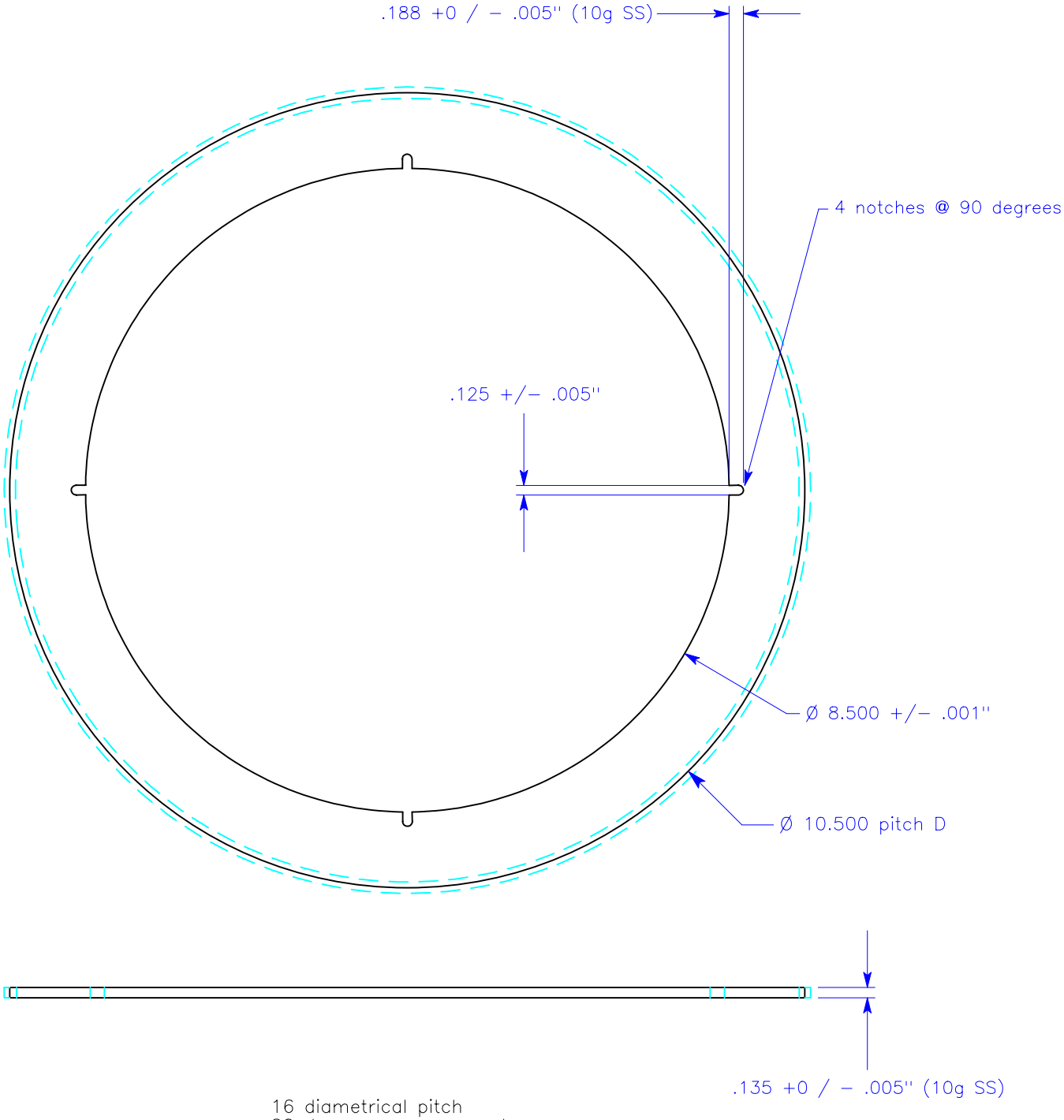

16 diametrical pitch
20 degree pressure angle
STD ANSI involute spur gear

nm: RewindRingGear.vlm		
sc: 1:2	dt: 5/16/00	p#.v#: 1326.2
The Long Now Foundation		
tol. AGMA qual #10, BackLash Class C		
other tols as listed		
Matl: Stainless Steel		
Qty: 2 each required		

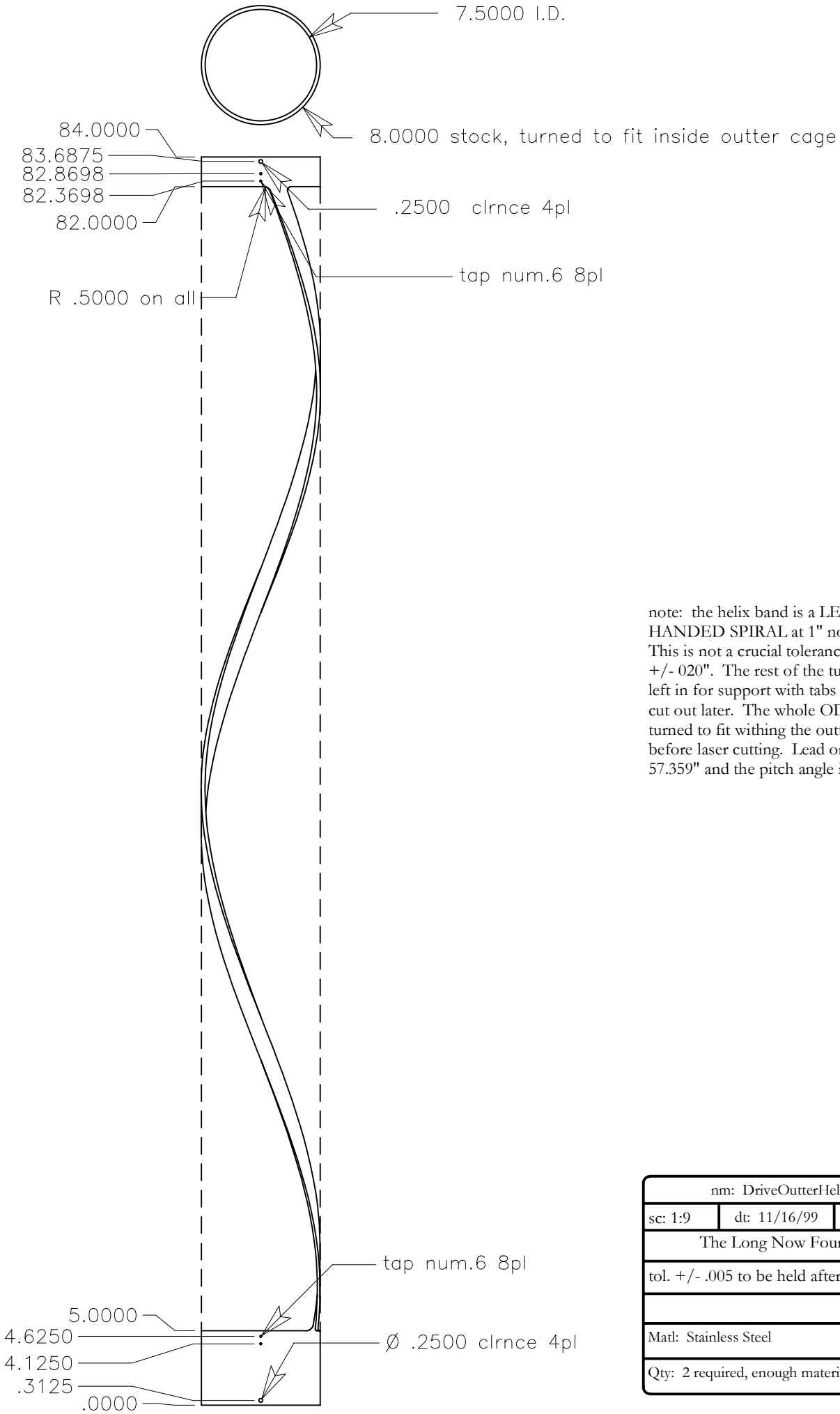

note: the helix band is a LEFT HANDED SPIRAL at 1" nominal width. This is not a crucial tolerance, it can be +/- 020". The rest of the tube should be left in for support with tabs that we will cut out later. The whole OD should be turned to fit withing the outter cage tube before laser cutting. Lead on spiral is 57.359" and the pitch angle is 67degrees.

nm: DriveOutterHelix.vlm		
sc: 1:9	dt: 11/16/99	p#.v#: 1190.5
The Long Now Foundation		
tol. +/- .005 to be held after plating		
Matl: Stainless Steel		
Qty: 2 required, enough material for 3		

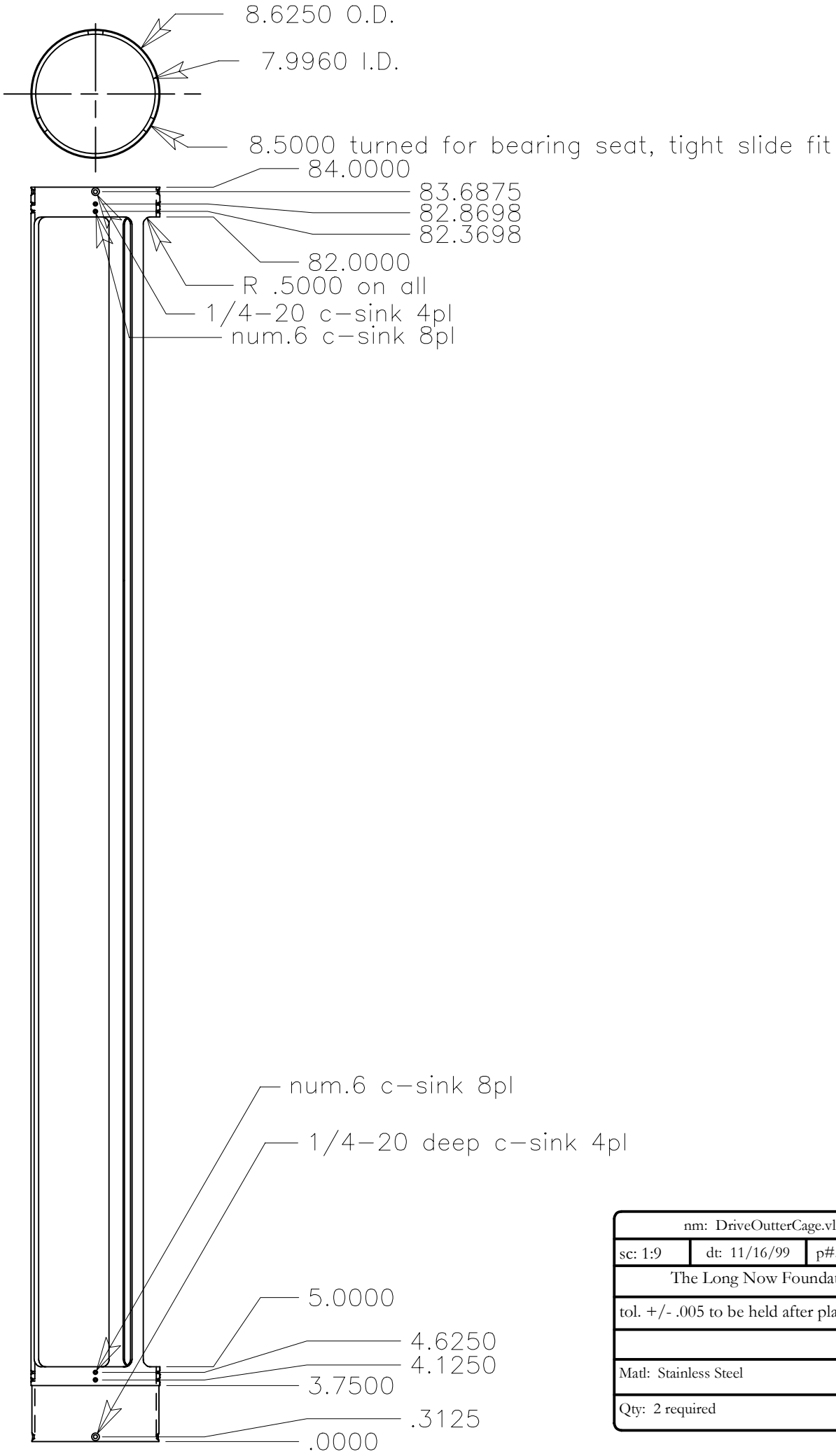

nm: DriveOutterCage.vlm		
sc: 1:9	dt: 11/16/99	p#.v#: 1100.5
The Long Now Foundation		
tol. +/- .005 to be held after plating		
Matl: Stainless Steel		
Qty: 2 required		

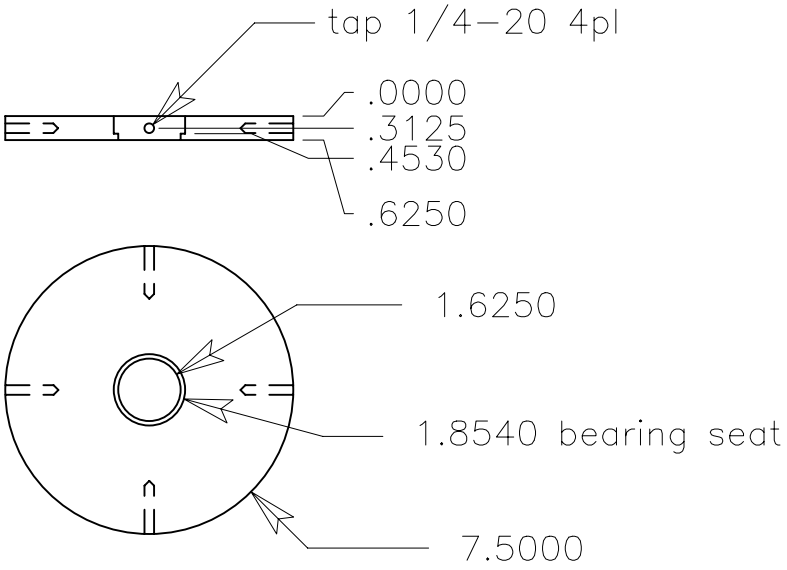

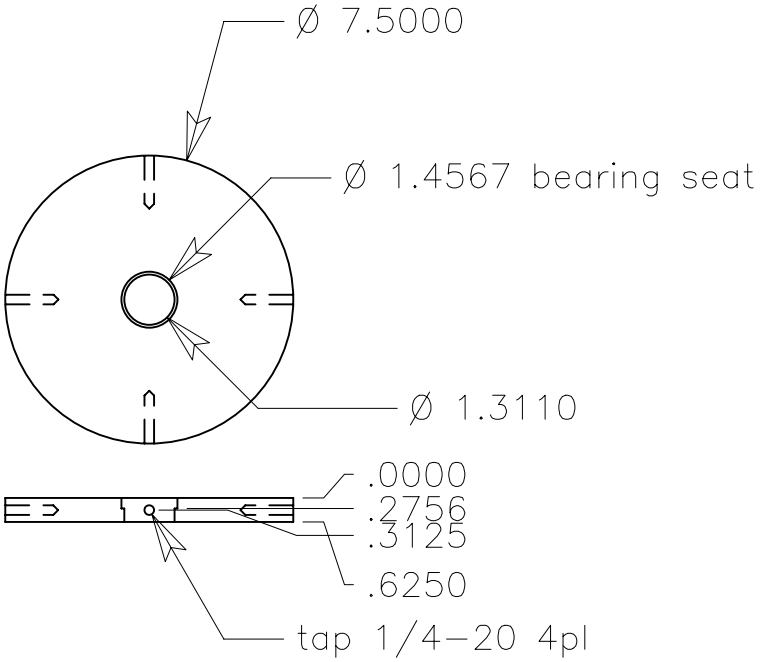

nm: DriveEndCaps8in.vlm		
sc: 1:5	dt: 11/16/99	p#.v#: .1
The Long Now Foundation		
tol. +/- .005 to be held after plating		
Matl: aluminum, SKF bearings		
Qty: 2 each required		

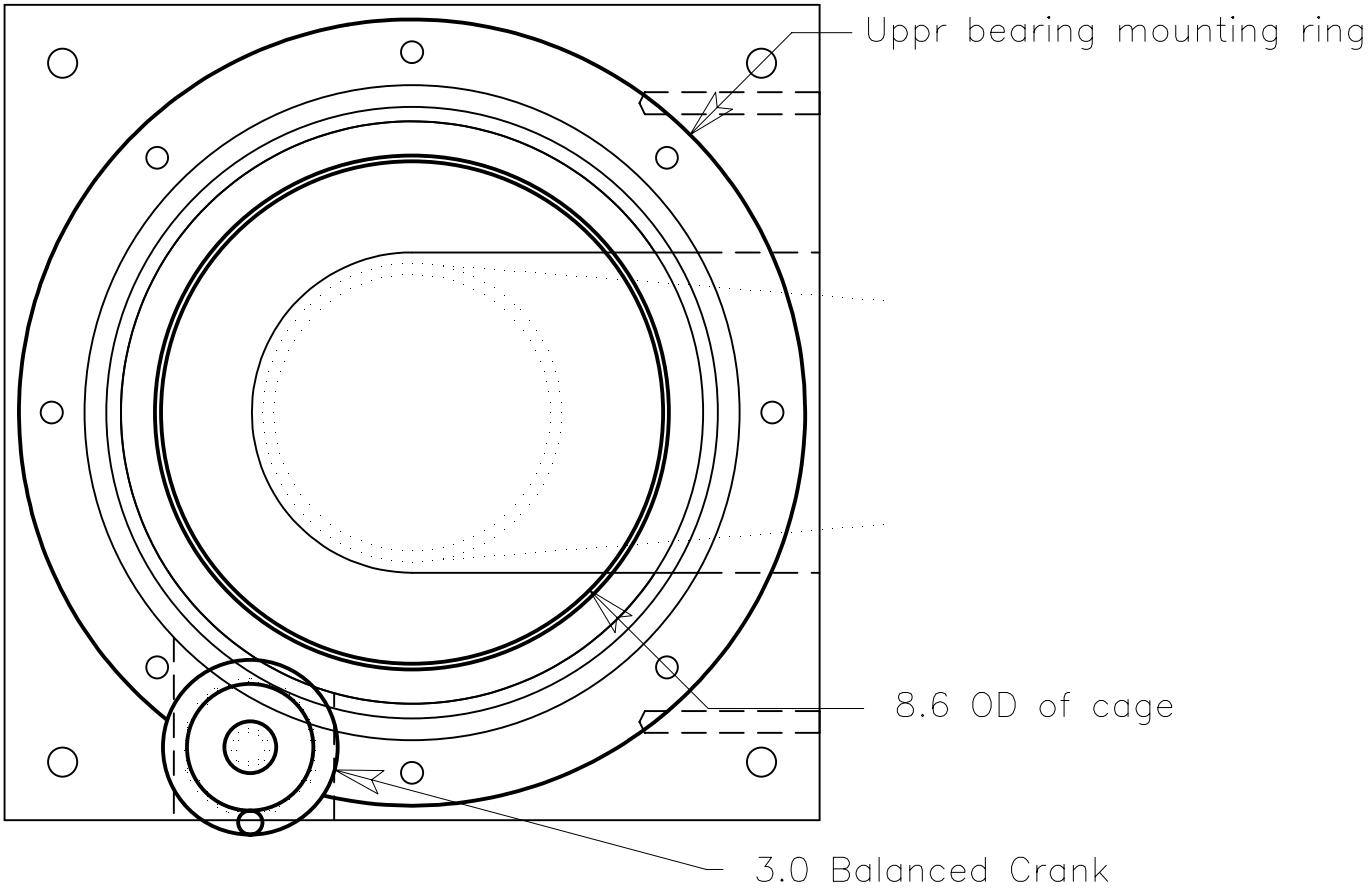
Uppr bearing mounting ring
8.6 OD of cage
3.0 Balanced Crank

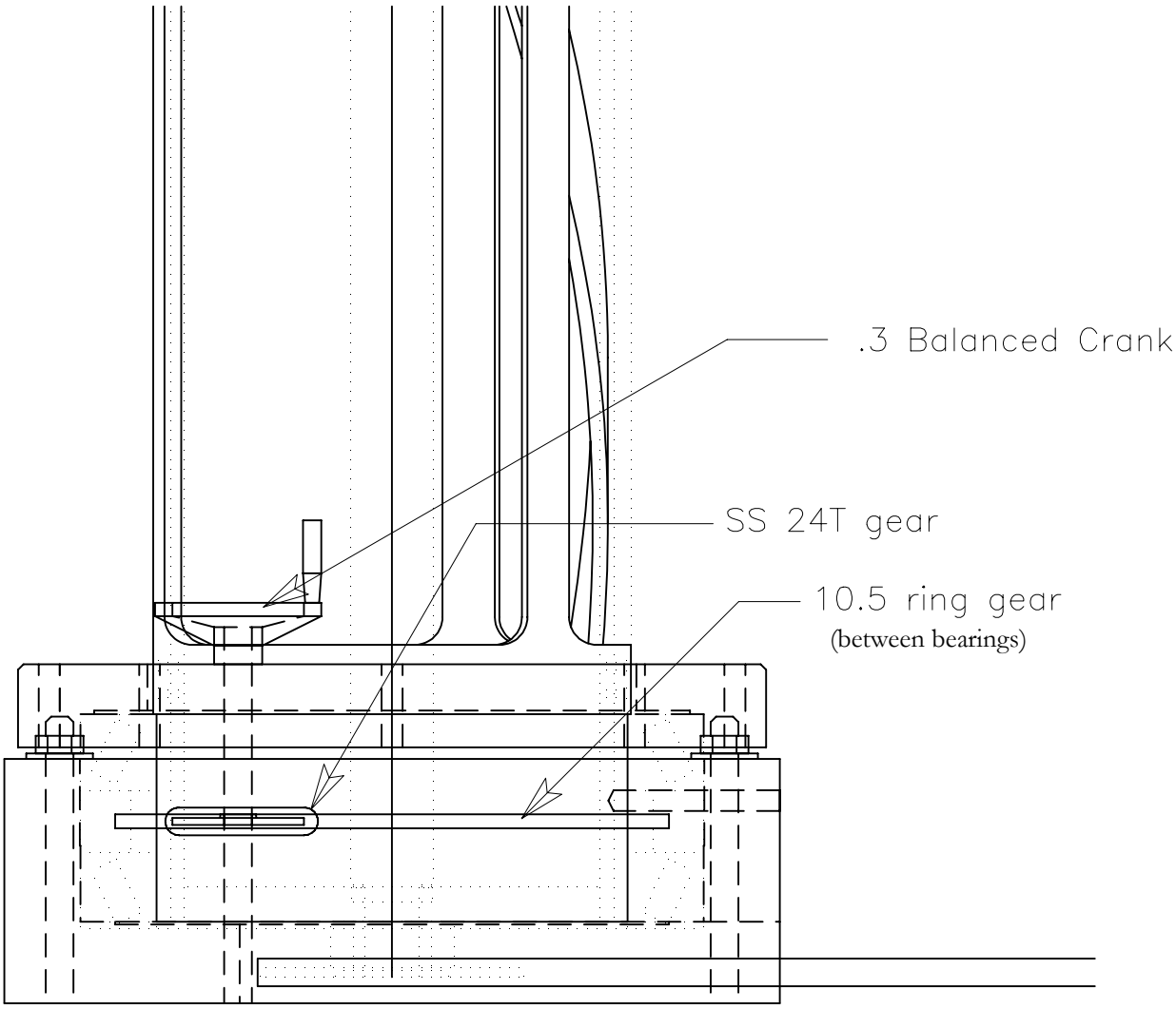
.3 Balanced Crank
SS 24T gear
10.5 ring gear
(between bearings)

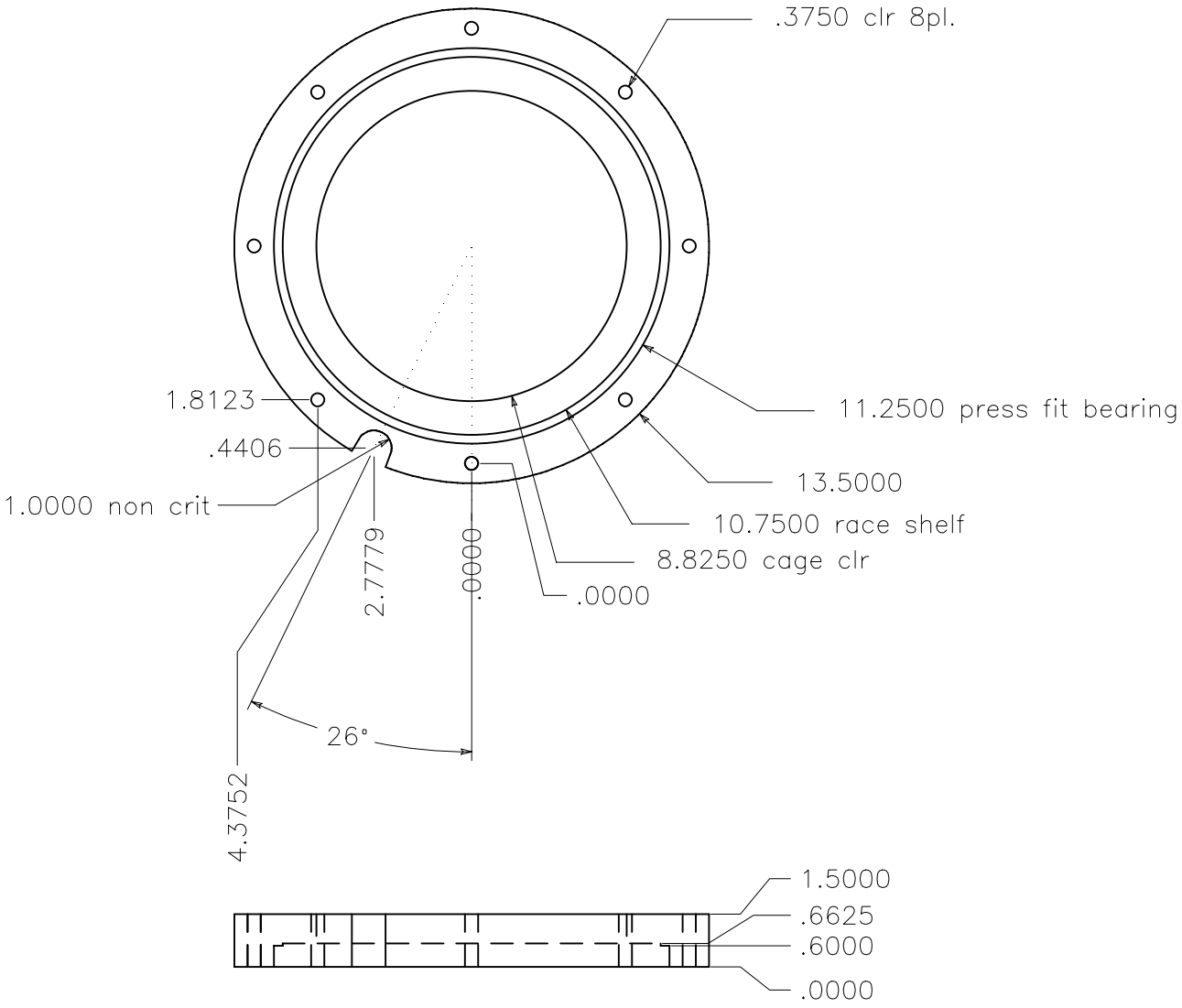

nm: DriveMountRing8in.vlm		
sc: 1:5	dt: 4/28/00	p#.v#: .2
The Long Now Foundation		
tol. +/- .005 to be held after plating		
Matl: SS, Timken bearings		
Qty: 2 each required (mirror rt/lt)		

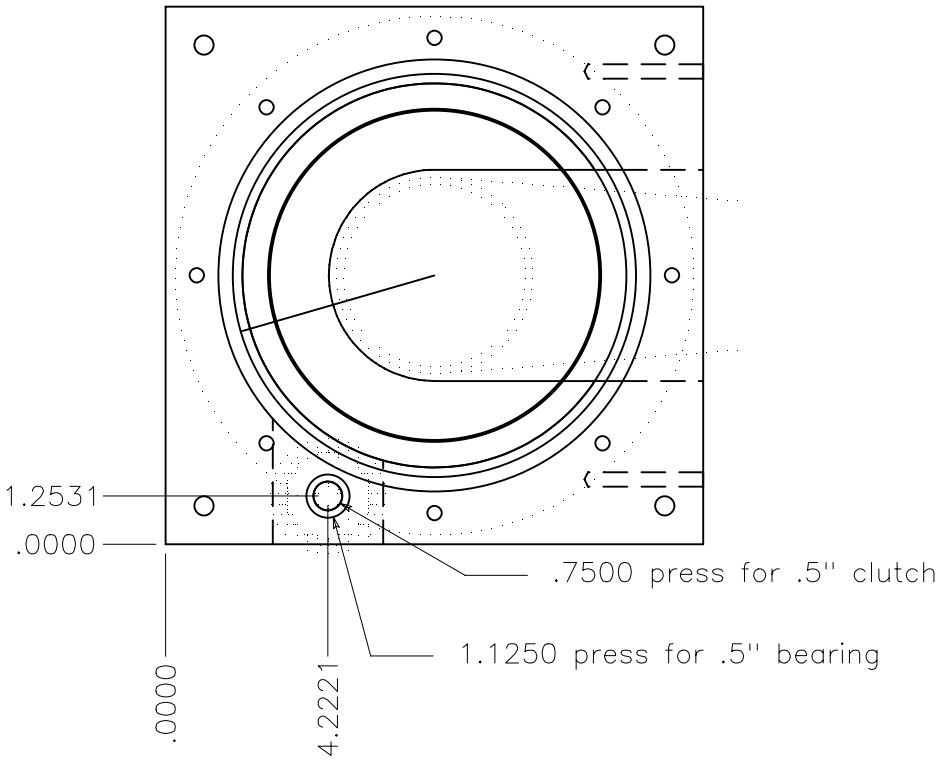

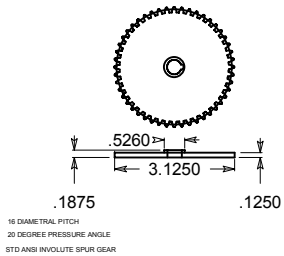

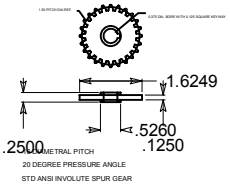

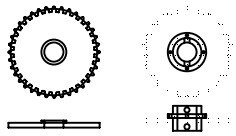

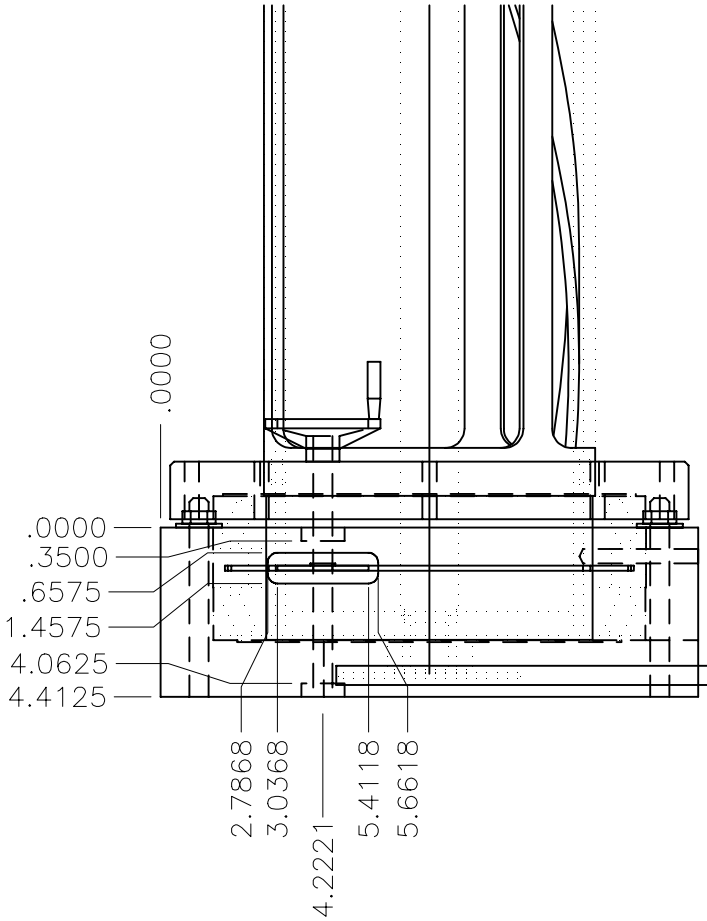

note: Two 36t Brass .5" ID idler gears should be broached for .125" keys. Two 3" SS handwheels from Reid will need to be modified for .5" shaft and pinned thru. Shaft will be .5" undersized drill rod with key ONLY where gear interacts. New Hub shown above will also be required.

nm: base8inMod.vlm		
sc: 1:5	dt: 4/28/00	p#.v#: .3
The Long Now Foundation		
tol. +/- .005 to be held after plating		
4 roller clutches and 4 ball brngs .5"ID req		
Matl: SS, Timkin bearings		
Qty: 2 each required		

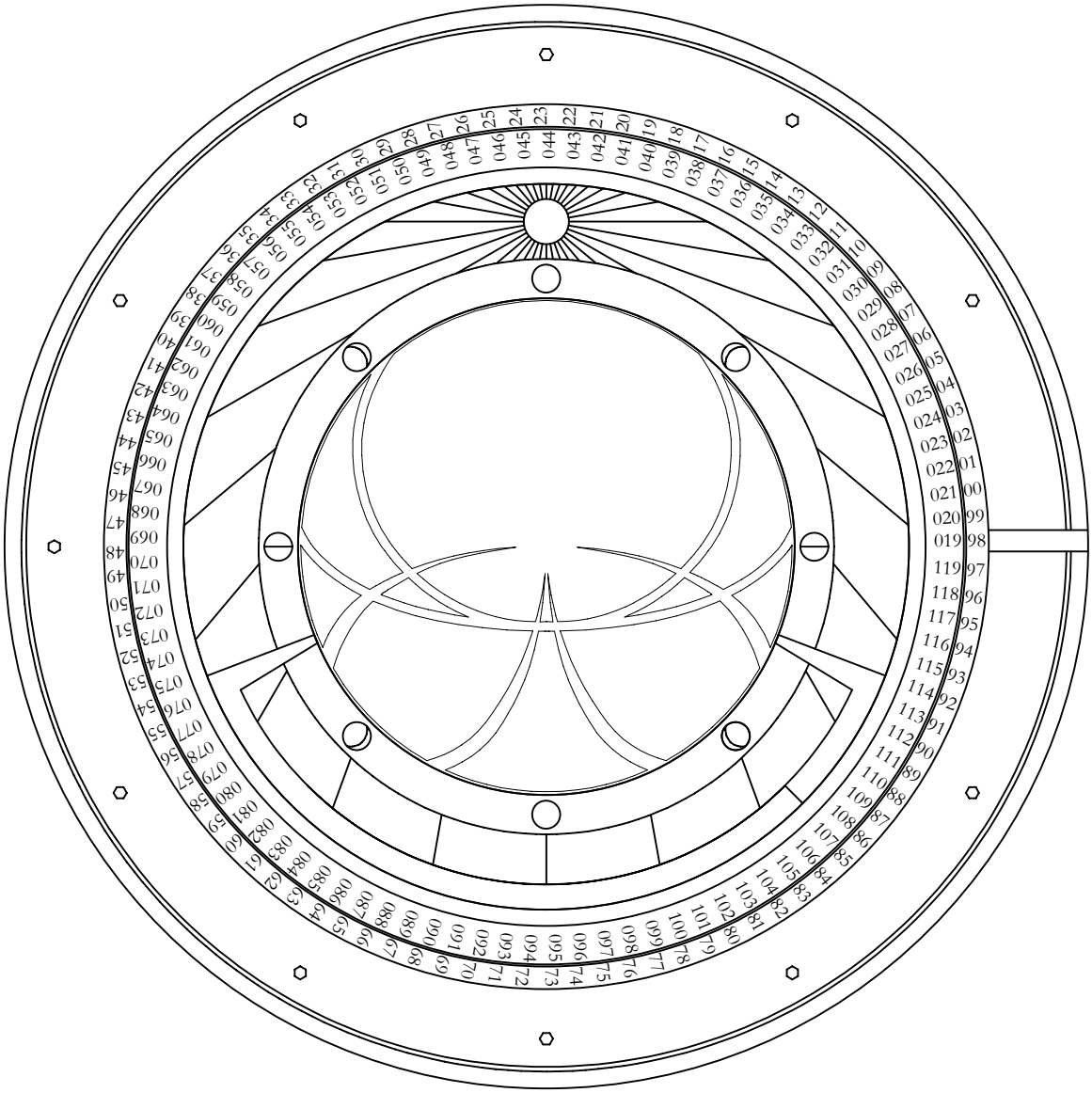

Notes: From outside to inside.
The two circles on the outter ring denote a channel machined in for aesthetic purposes.
The hexagons on the outter ring are bolt heads.
On the right hand side the lines there represent where the brass window press fits in to show the current year.
The year is depicted with an extra zero in front for showing the year thru 11999 (gregorian)
The Horizon indicators are shown here transparently
The sun ring imagery is depicted here simplified. It is reverse etched from brass.
Eight key moon phases are shown here but we use 32 phases only one of which is visible thru the moon window at any one time.
THere are no stars shown on the star field in this drawing.

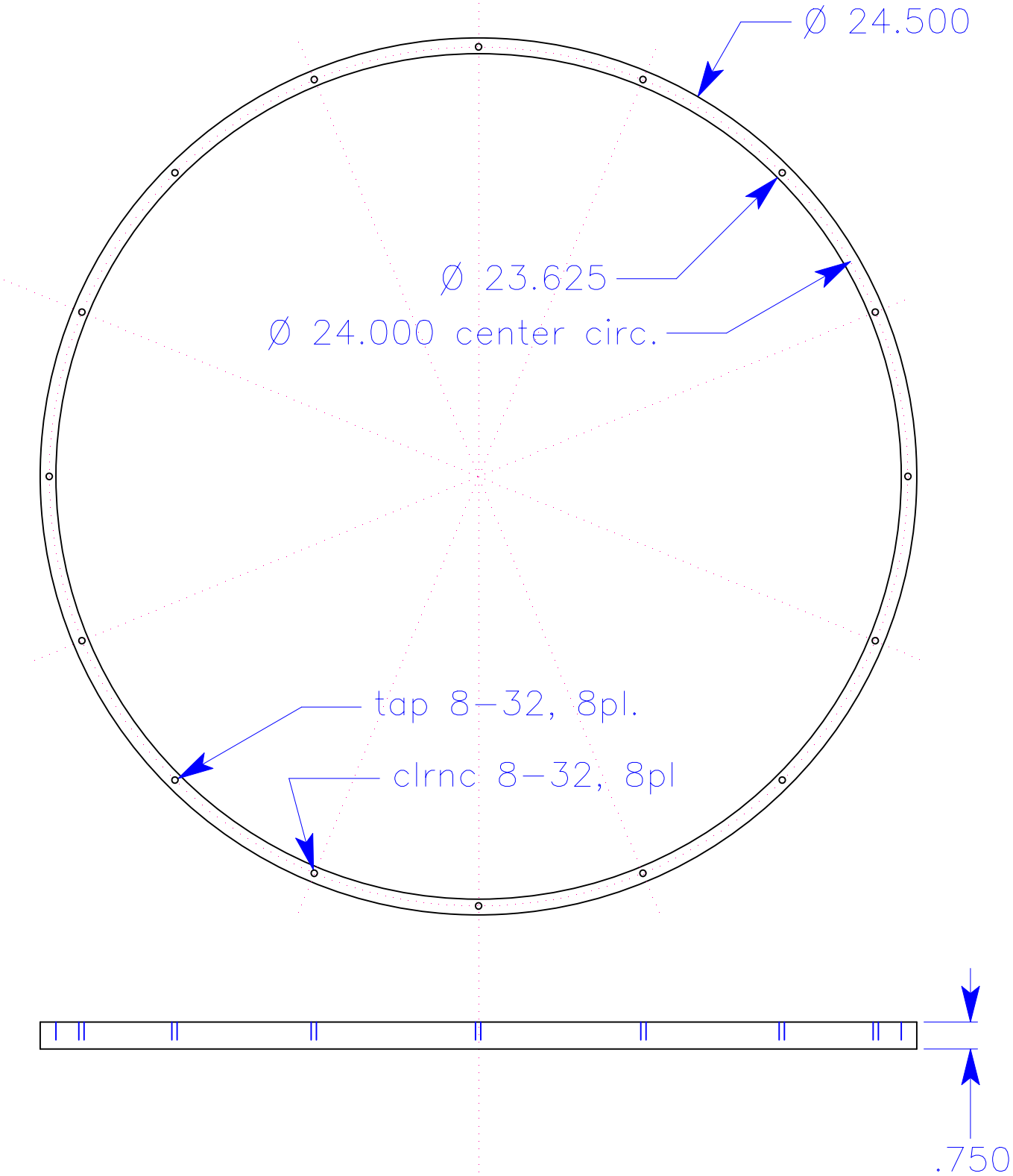

note: Every other hole is tapped or clearance for 8-32 screws each is 22.5 degrees from the otherspacing evenly around the circle. (eg. This makes a tapped holes 45 degrees from eachother)

PLATING: there are 5 of these total. This is the largest. the smallest is 18.25" OD. Tapped holes DO NOT need plugging as they are unused.

nm: YearSubSpaceRing.VLM		
sc: 1:4	dt: 12/13/98	p#: 5601.1
The Long Now Foundation		
tol. +/- .005" on holes .010" on flatness and shape		
Matl: SS		
Qty: 1 required		

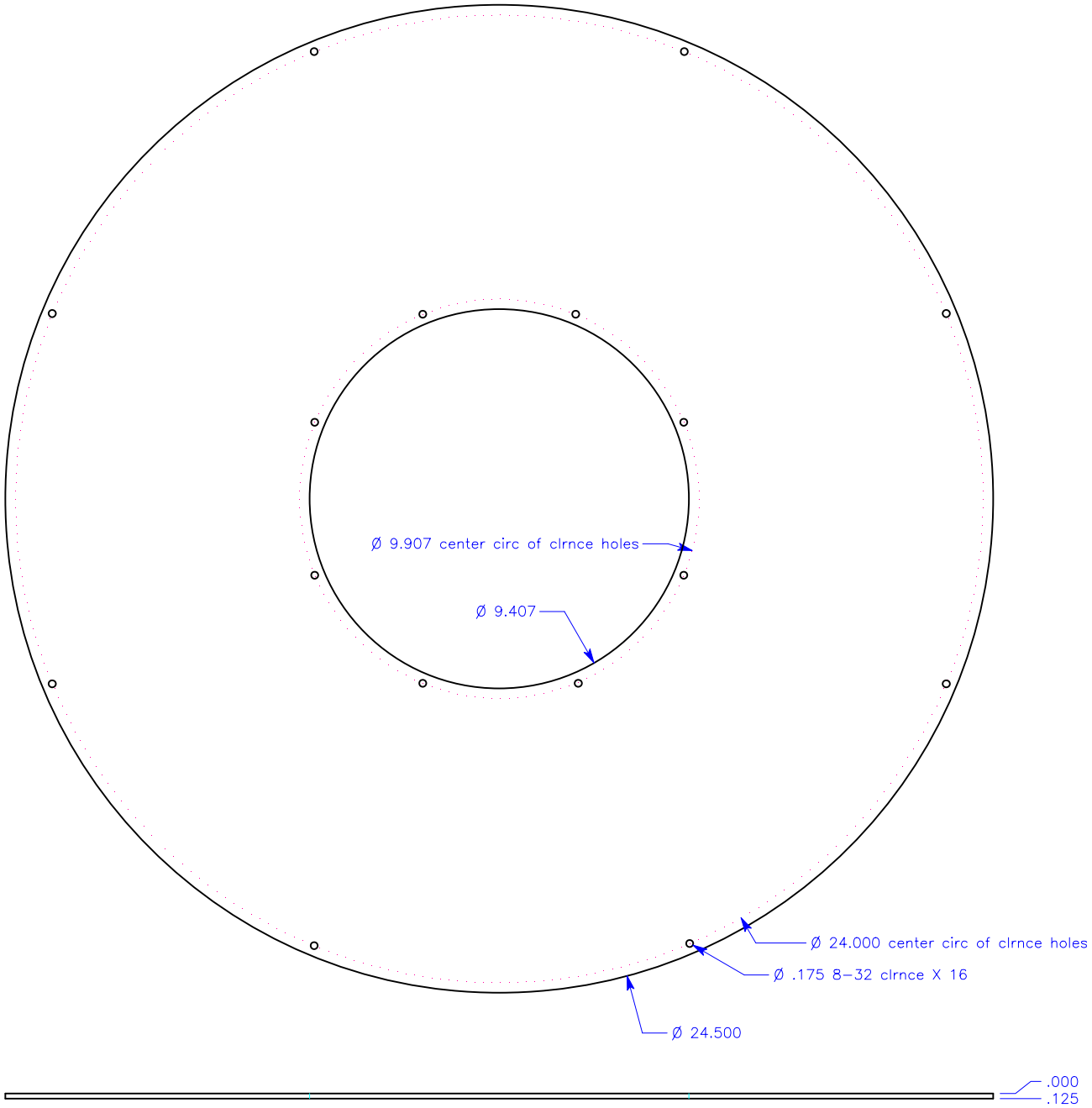

note:.

nm: YearSubSpacer.VLM		
sc: 1:3.5	dt: 10/22/98	p#: 5511.2
The Long Now Foundation		
tol. +/-.005		
Matl: 70-75 Aluminum, tumble deburred		
Qty: 2 required		

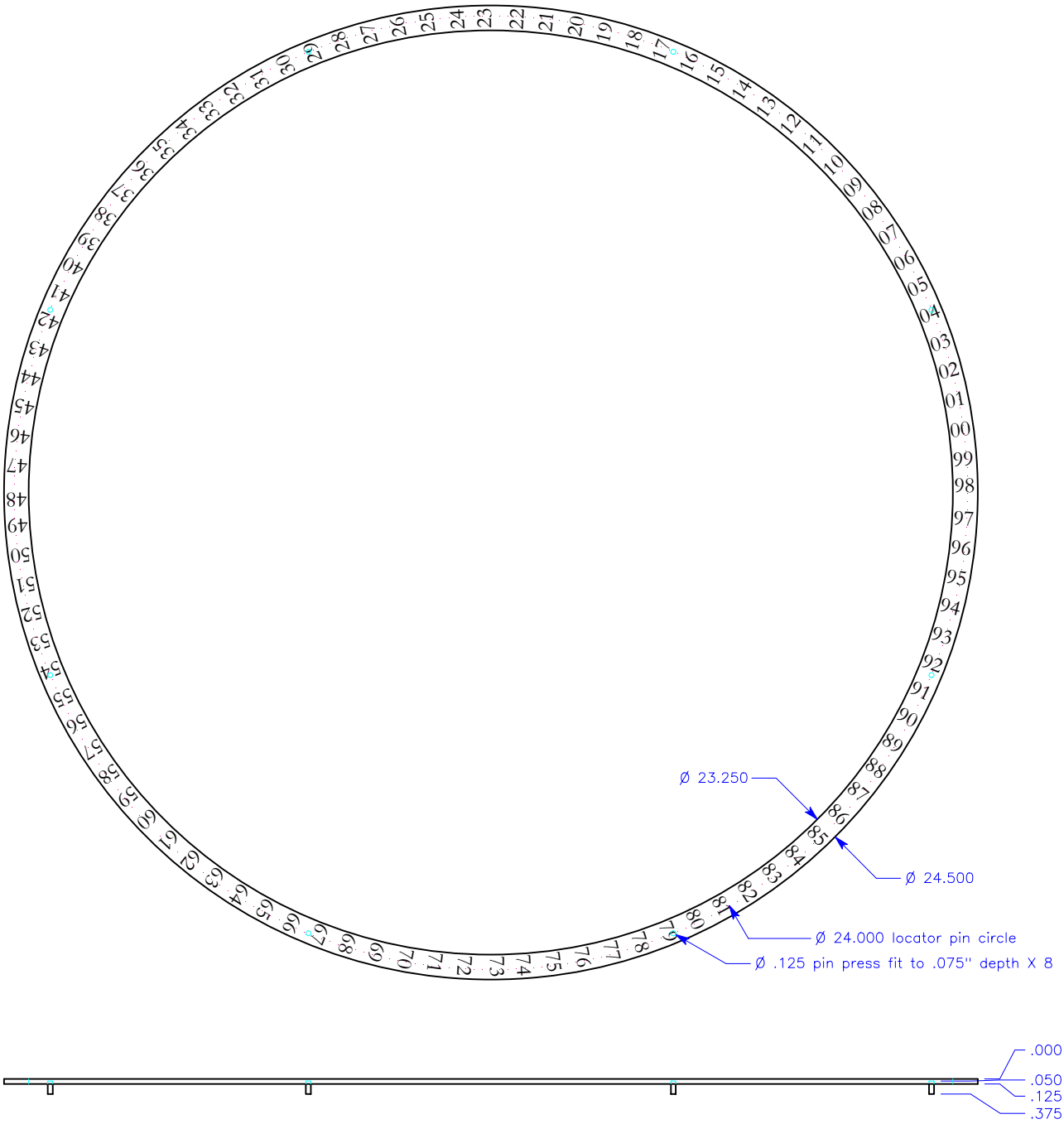

note: [for etcher: The text within the part is etched (font is garamond). Please call to discuss depth depending on etching method. We can supply the DXF file for this.] Edge and top finish are most crucial here, these are the most visible parts on the clock, every measure should be taken to be sure they are not scratched or bent. Parts should be flat to within .010". The locater pins underneath should be same material as plate. They can be located by spot facing blind holes from the bottom, pressed in and then loctited in place. Most important is that there is no discoloration or show through to front. They take almost no lateral load and are primarily for location.

nm: Year.VLM		
sc: 1:3.5	dt: 10/22/98	p#: 5507.2
The Long Now Foundation		
tol. +/- .020 (etch) +/-.005 (locator pins)		
Matl: Stainless Steel		
Qty: 2 required		

p#: 5519.1

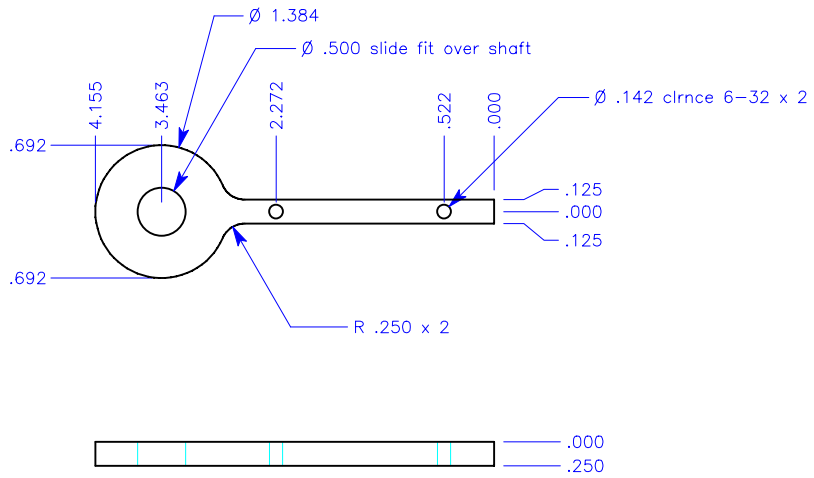

p#: 5520.1

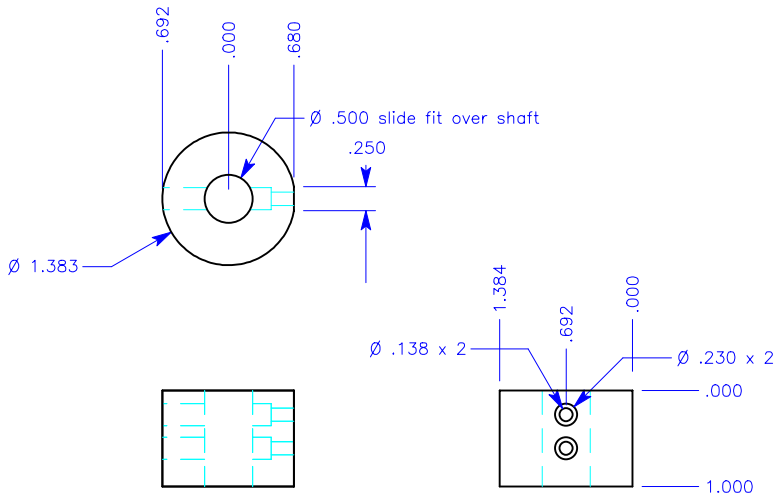

nm: Face Support Mounts.VLM		
sc: 1:3.5	dt: 03/31/00	p: 5519 & 20.1
The Long Now Foundation		
tol. +/-.005		
Matl: 304 SS		
Qty: 6 required		

p#: 5519.1

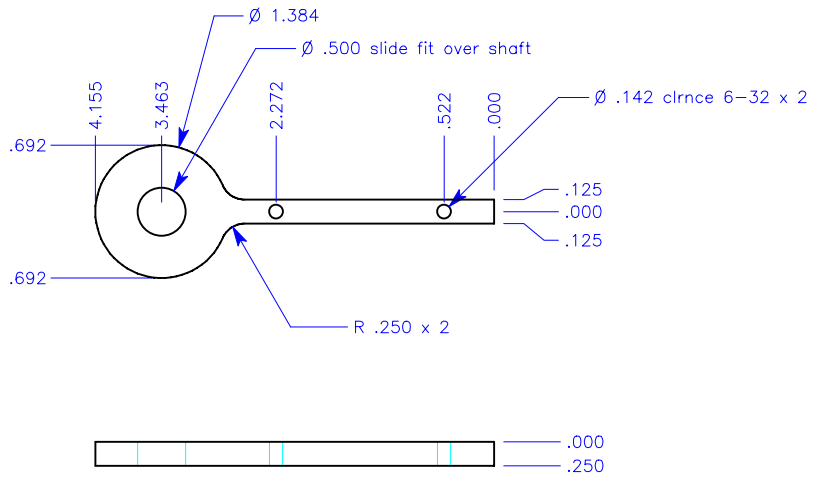

p#: 5520.1

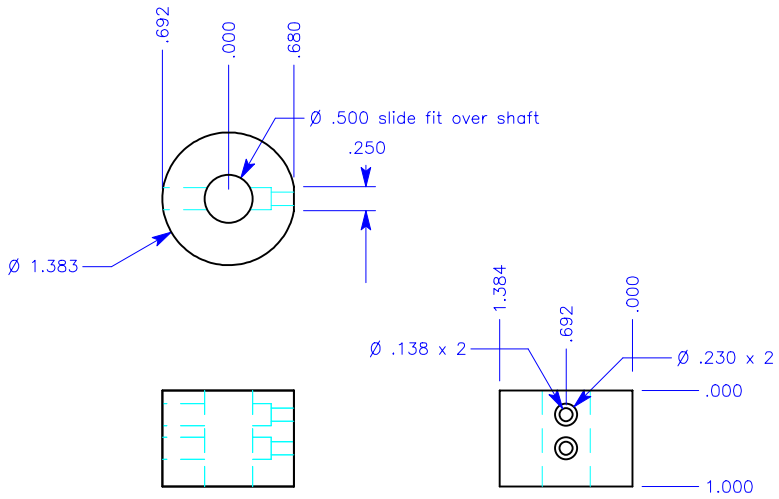

nm: Face Support Mounts.VLM		
sc: 1:3.5	dt: 03/31/00	p: 5519 & 20.1
The Long Now Foundation		
tol. +/-.005		
Matl: 304 SS		
Qty: 6 required		

p#: 5519.1

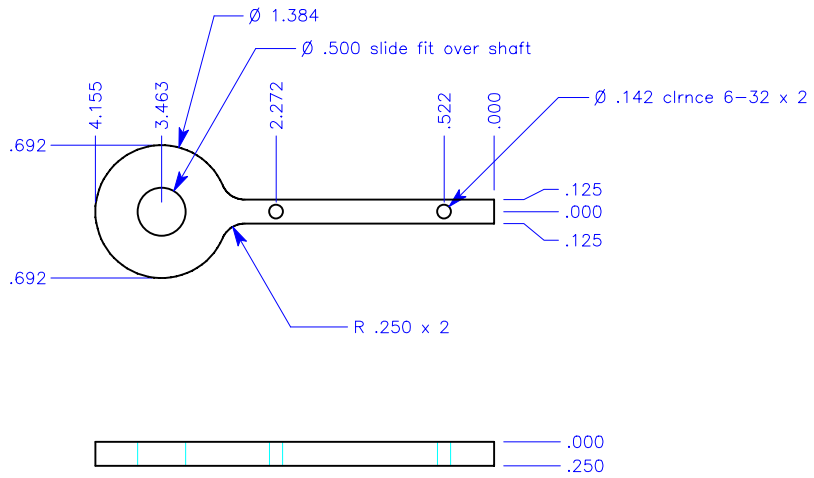

p#: 5520.1

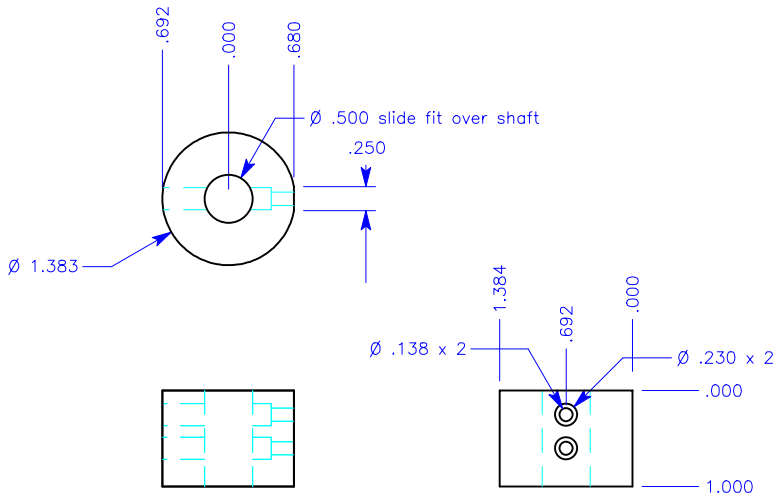

nm: Face Support Mounts.VLM		
sc: 1:3.5	dt: 03/31/00	p: 5519 & 20.1
The Long Now Foundation		
tol. +/-.005		
Matl: 304 SS		
Qty: 6 required		

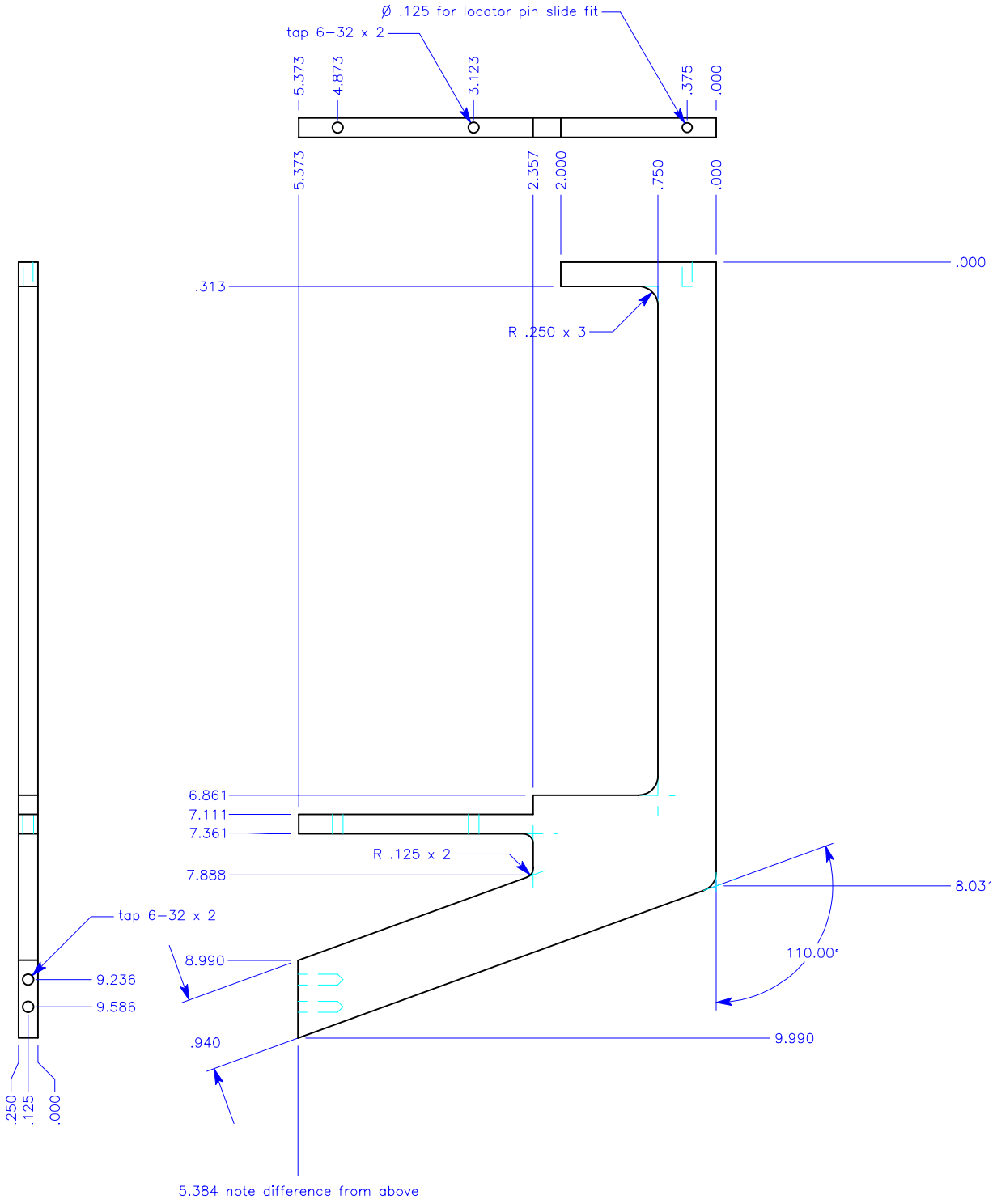

note: Dimensions have been put to virtual corners on radiused areas. These are highly visible parts on the clock, every measure should be taken to be sure they are not scratched or bent and that their surface finish be high (N5).

nm: Face Support.VLM		
sc: 1:3.5	dt: 11/13/98	p#: 5518.2
The Long Now Foundation		
tol. +/-.005		
Matl: 304 SS		
Qty: 6 required		

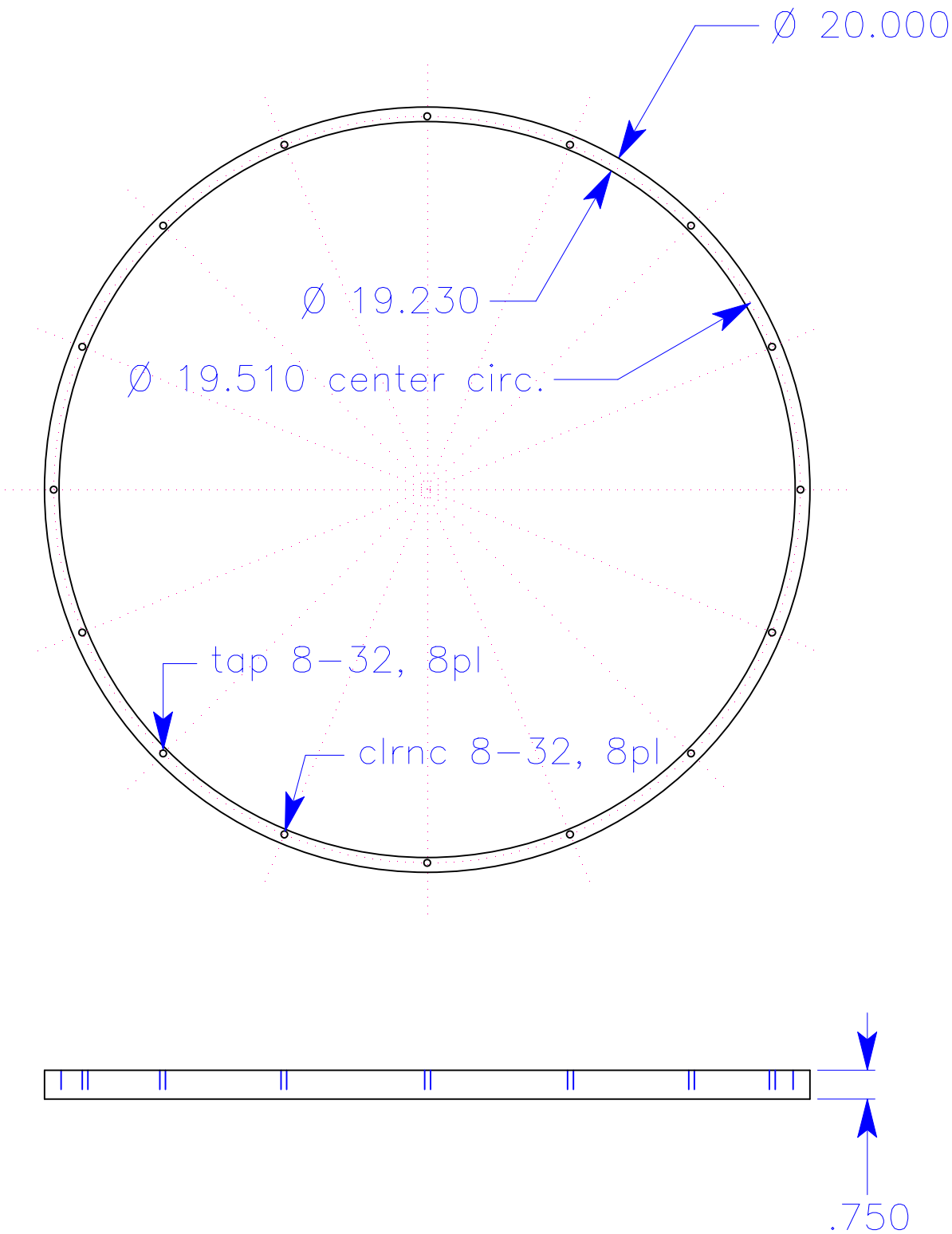

note: Every other hole is tapped or clearance for 8-32 screws each is 22.5 degrees from the otherspacing evenly around the circle. (eg. This makes a tapped holes 45 degrees from eachother)

nm: SunSubSpaceRing.VLM		
sc: 1:4	dt: 12/13/98	p#: 5605.1
The Long Now Foundation		
tol. +/- .005" on holes .010" on flatness and shape		
Matl: SS		
Qty: 1 required		

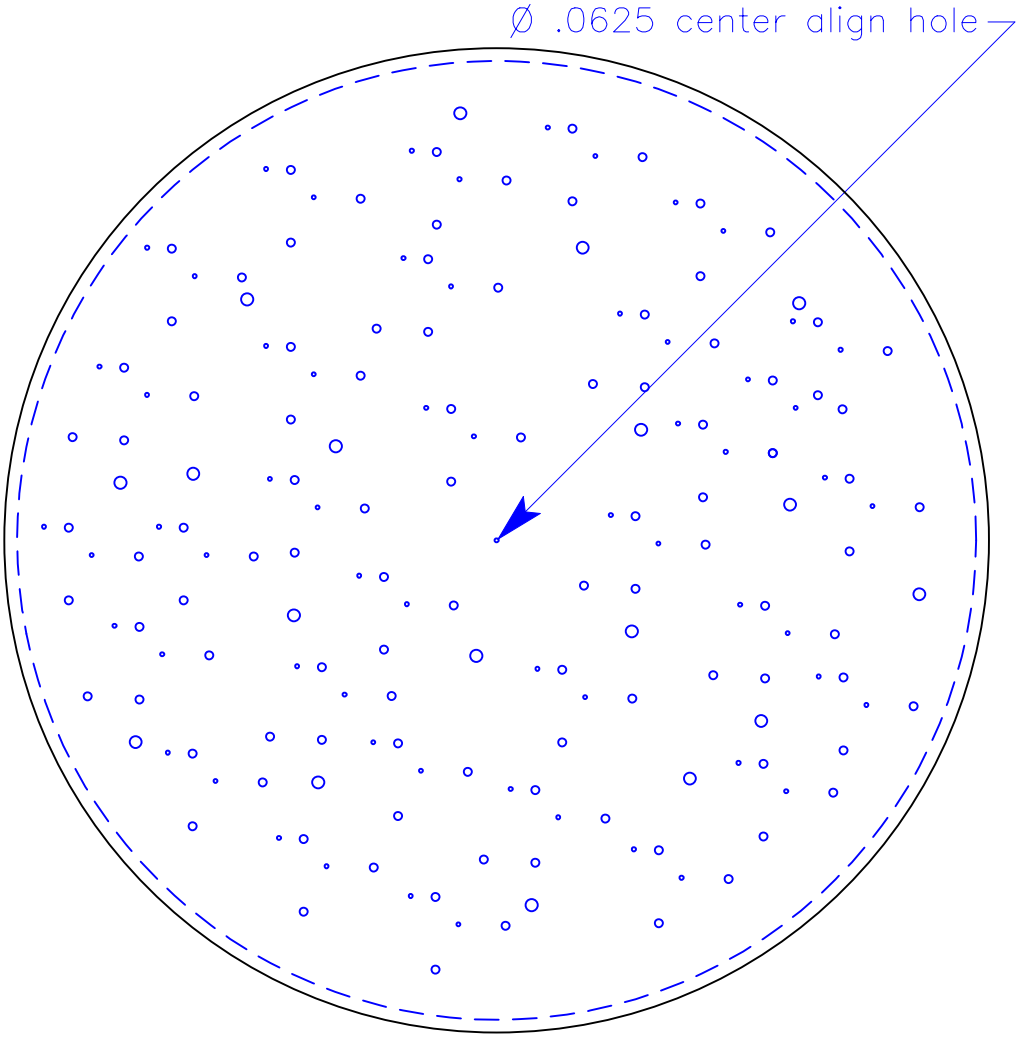

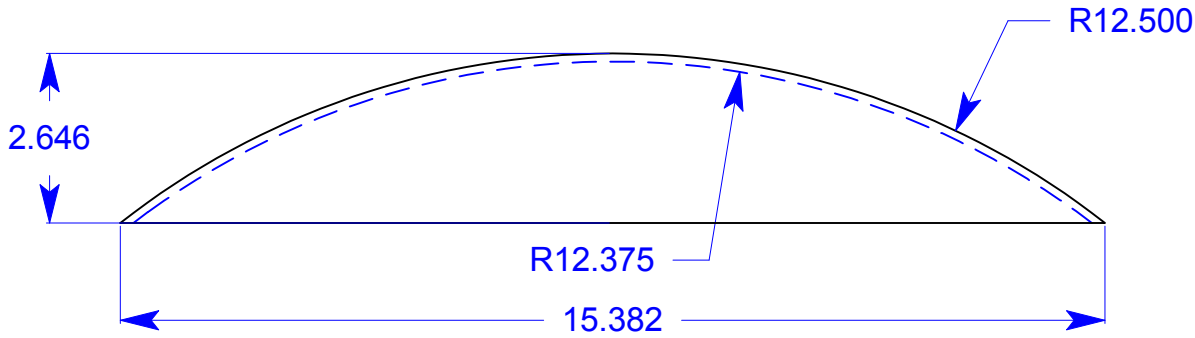

notes: We supply dome part but need you to machine in the 5 different star sizes with the end of a ball nose bit on a five axis machine. We will supply IGES file for star locations (ones shown are NOT accurate). Part is a parabolic dome spun from .125" thick 304 stainless. It is +/- .035".

NAME: STARFIELD.DWG			
SCALE: 1:3	DATE: 3-24-00	PART #: 4346.2	
SHEET SIZE: D	REV.: 1		
DRAWN BY: AFR			
TOLERANCE: ±0.010" on star locations, see note about spun part			
MATL.: 304 Stainless Steel	QTY.: 1		
FINISH: We supply polished part HANDLE / SHIP WITH CARE	SHEET 1 OF 1		

Stars

This file uses the notebook spherica.nb

```
SetDirectory["Macintosh HD:Clock"];

Get[":math:stardata.math"];
```

these stars we originaly in the bsd4 format

```
convertstar[{rah_, ram_, ras_, dd_, dm_, ds_, mag_}] :=
 N[{{15 * (rah + ram/60 + ras/3600), (dd + dm/60 + ds/3600)}, mag}]
```

the file define a variable called medstars, with goedesic coordinates in degree, these need to be filtered and converted to radian

```
geo2elc[{p_, m_}] := {Tilt[p * {Degree, Degree}, 23.5 °], m}

eclstars = geo2elc /@ medstars;

coord[{{ra_, dec_}, mag_}] := {ra, dec }

Length[brightstars]

48

Length[medstars]

2849

showstars[stars_] := ListPlot[unistarproject[coord[#]]& /@ stars, AspectRatio → 1]

brighterthan[stars_, mag_] :=
 Cases[stars, {p_, m_ /; m < mag}]

magcutoff = 3.5;


northof[stars_, l_] :=
 Cases[stars, {{ϕ_, θ_ /; θ > l}, m_}]

latcutoff = -60 °

-60 °

stars = brighterthan[
  northof[eclstars, latcutoff], magcutoff];

Length[stars]

261
```

```
ListPlot[First /@ medstars]
```

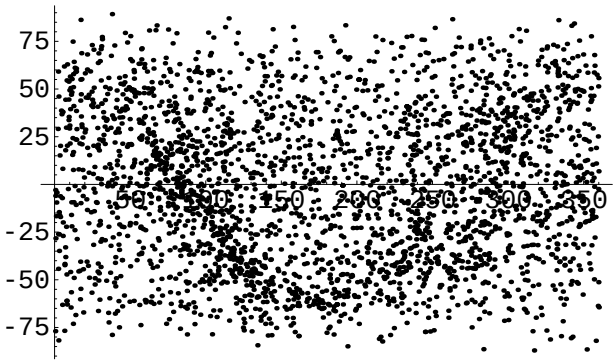

- Graphics -

```
ListPlot[First /@ stars]
```

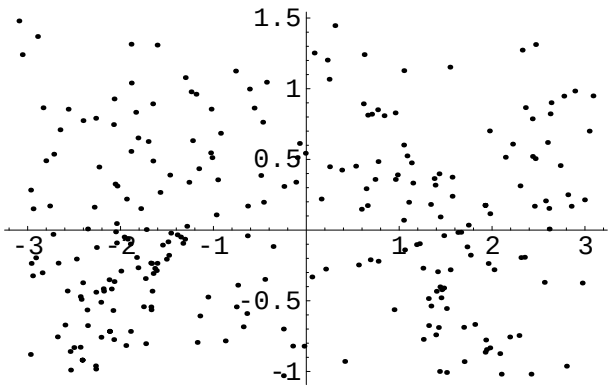

- Graphics -

```
showstars[eclstars]
```

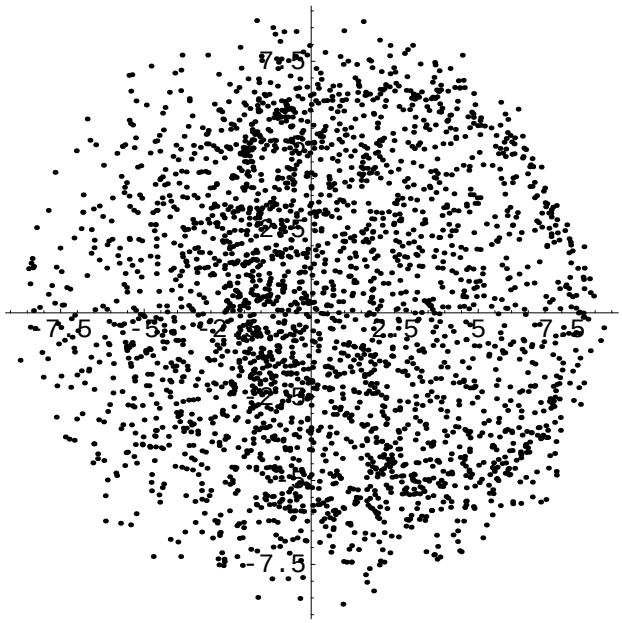


```
- Graphics -

sample = Table[eclstars[[ i]], {i, 2, 500, 25}];

icon[{p_, m_}] :=
 With[{c = unistarproject[p]},
  Join[
   {AbsolutePointSize[2]},
   {Point[c]},
   crow[c, Floor[magcutoff] - Round[m]]]]

stardot[{p_, m_}] :=
 With[{c = unistarproject[p]},
  Join[
   {AbsolutePointSize[1 + Floor[magcutoff] - Round[m]]},
   {Point[c]}]]

crowsize = .2

0.2

0.2

0.2

crow[p_, n_] := Table[Line[{p, p + crowsize * {Sin[i], Cos[i]}}], {i, -n π / 8, n π / 8, π / 4}]


starimage = Graphics[icon /@ stars]

- Graphics -
```

```
dotimage = Graphics[stardot /@ stars]
```

- Graphics -

```
outercircle = Graphics[{
   Line[{{-baseR, baseR}, {baseR, baseR}}],
   Circle[{0, 0}, baseR],
   Line[{{.5, .5}, {-.5, -.5}}],
   Line[{{.5, -.5}, {-.5, .5}}],
   Line[{{0, baseR - .5}, {0, baseR}}]}]
```

- Graphics -

```
Table [{a, 0}, {a, 0, 2 π, 2 π / 4 }]
```

$\left\{\{0, 0\}, \left\{\frac{\pi}{2}, 0\right\}, \{\pi, 0\}, \left\{\frac{3\pi}{2}, 0\right\}, \{2\pi, 0\}\right\}$

```
elcgraphics = Graphics[Join[{AbsolutePointSize[1]},
   Point /@Table [unistarproject[Tilt[{a, 0}, 23.5 °]], {a, 0, 2 π, 2 π / 120}]]]
```

- Graphics -

```
stargraphics = Show[starimage, outercircle, elcgraphics, AspectRatio → 1]
```

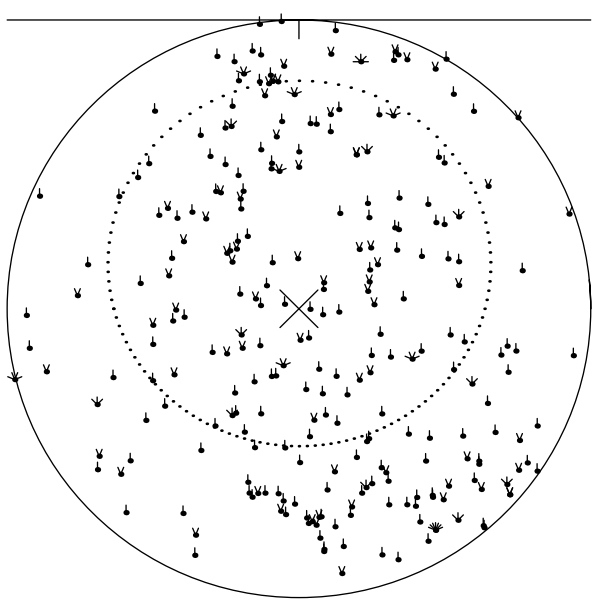

- Graphics -

```
dotgraphics = Show[dotimage, outercircle, elcgraphics, AspectRatio → 1]
```

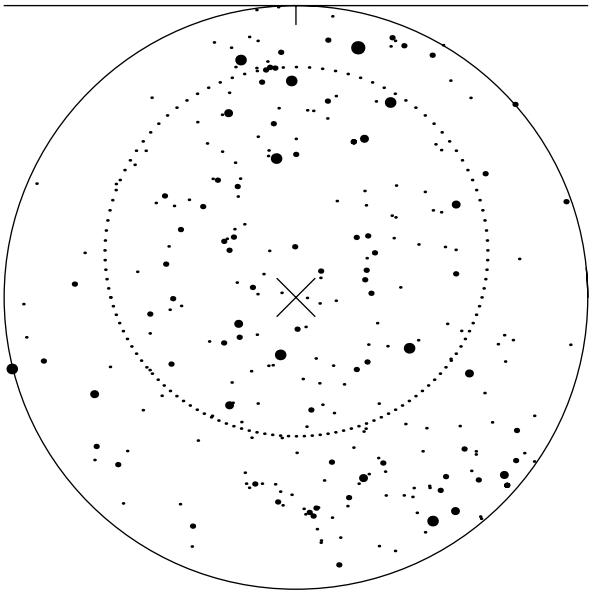

- Graphics -

```
retegraphics = Show[rete1, rete2, AspectRatio → 1]
```

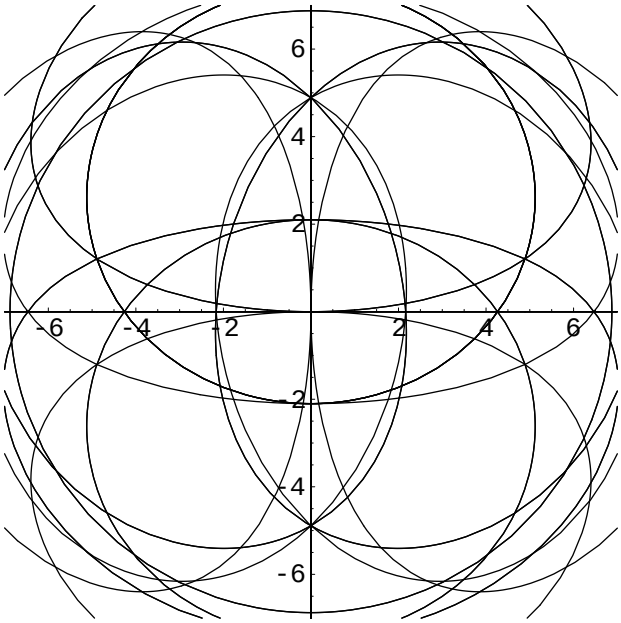

- Graphics -

```
SetDirectory["Macintosh HD:Clock:images:dail artwork:"]
```

```
Macintosh HD:Clock:images:dail artwork
```

```
Export["star.EPS", stargraphics, "EPS", ImageSize → Floor[2 baseR 72]]
```

star.EPS

```
Export["rete.EPS", retegraphics, "EPS", ImageSize → Floor[14 72]]
```

rete.EPS

```
Export["star.PICT", stargraphics, "PICT", ImageSize → Floor[2 baseR 72]]
```

star.PICT

```
Export["rete.PICT", retegraphics, "PICT", ImageSize → Floor[14 72]]
```

rete.PICT

```
Export["dot.PICT", dotgraphics, "PICT", ImageSize → Floor[2 baseR 72]]
```

dot.PICT

```
baseR 2
```

15.38

```
Floor [baseR 2 72]
```

1107

```
Export["dot.PDF", dotgraphics, "PDF", ImageSize → Floor[2 baseR 72]]
```

dot.PDF

```
Export["dot.JPG", dotgraphics, "JPEG", ImageResolution → 100,
 ImageSize → Floor[2 baseR 72 / 10]]
```

dot.JPG

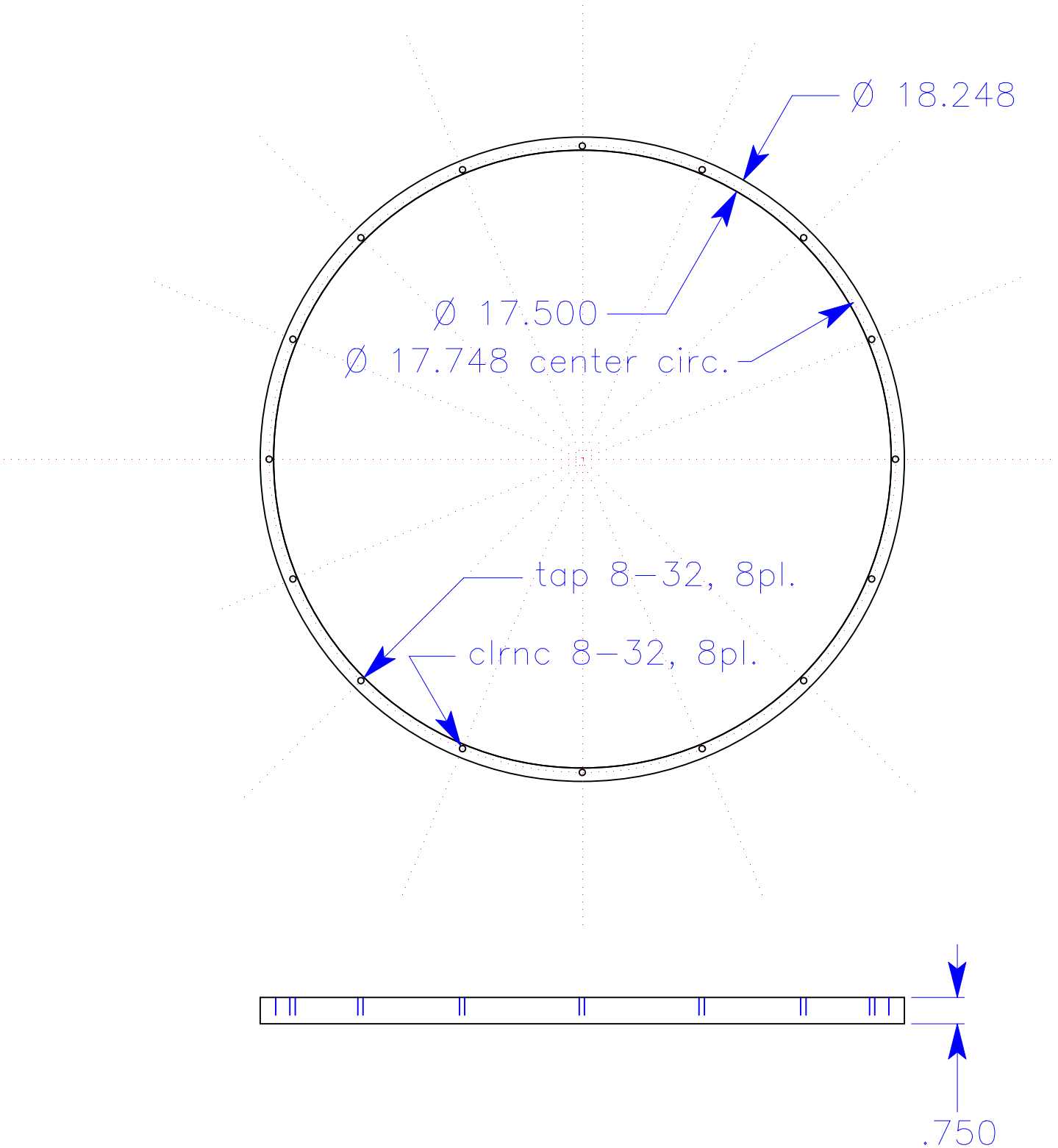

note: Every other hole is tapped or clearance for 8-32 screws each is 22.5 degrees from the otherspacing evenly around the circle. (eg. This makes a tapped holes 45 degrees from eachother)

nm: ReteSubSpaceRing.VLM		
sc: 1:4	dt: 12/13/98	p#: 5604.2
The Long Now Foundation		
tol. +/- .005" on holes .010" on flatness and shape		
Matl: SS		
Qty: 1 required		

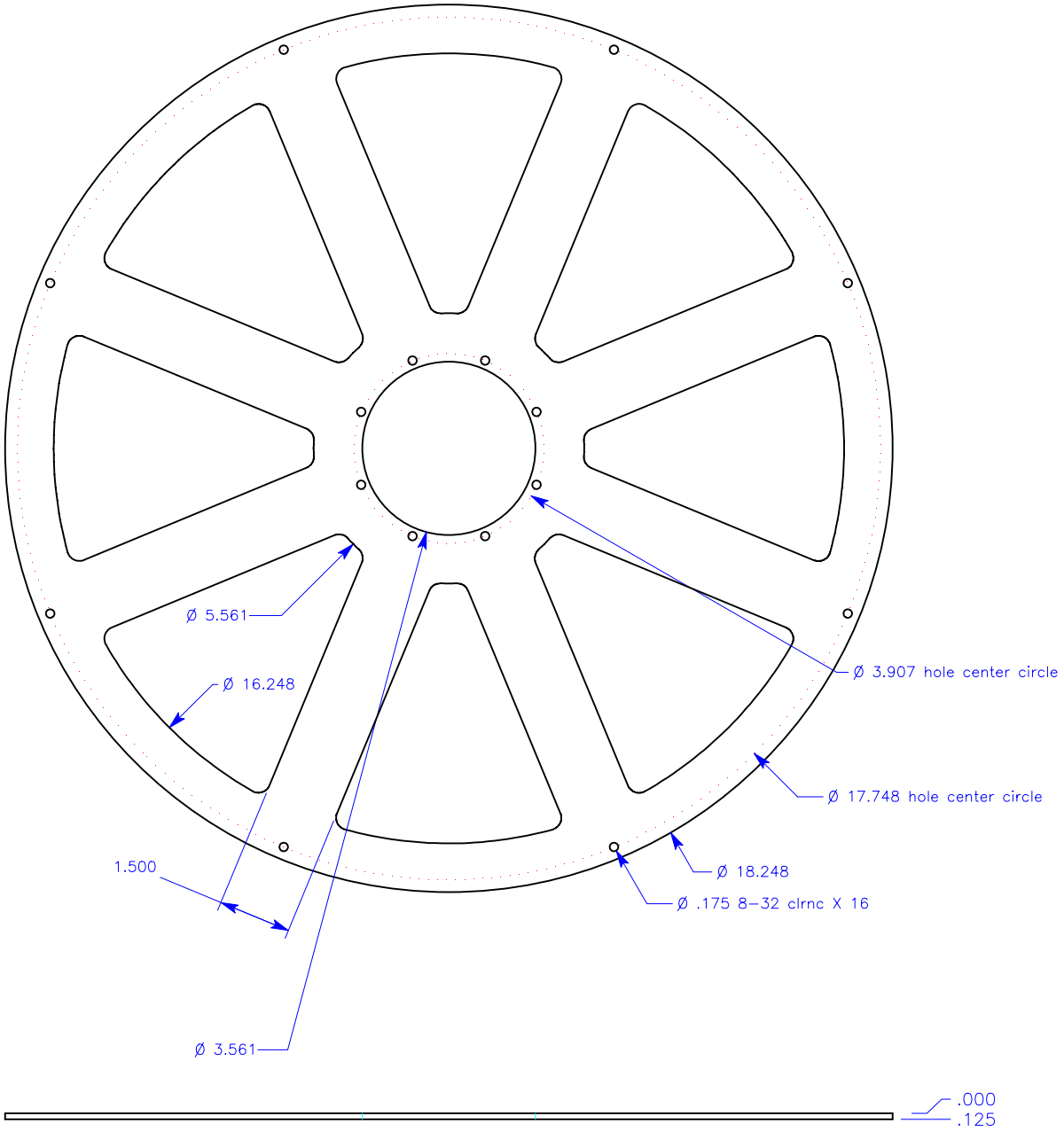

note:.Pie shaped opening are for aesthetic improvement and weight reduction. Tolerances here are not as critical. They have 1.5" wide spokes with 1" distance from both internal and outter diameters. Their internal corners are radiused to .25".

nm: ReteSubSpacer.VLM		
sc: 1:3.5	dt: 11/11/98	p#: 5514.2
The Long Now Foundation		
tol. +/-.005		
Matl: 70-75 Al		
Qty: 2 required		

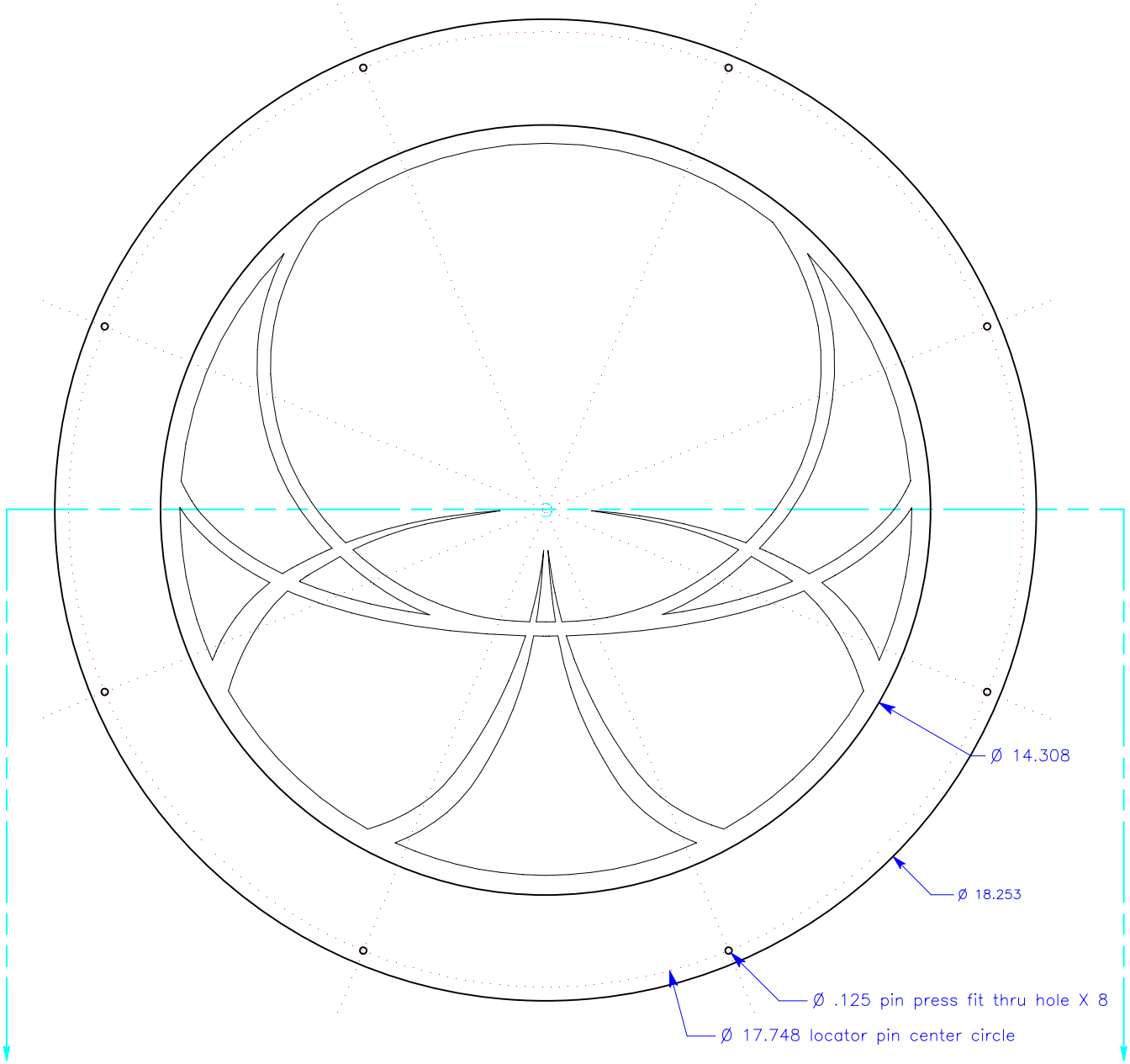

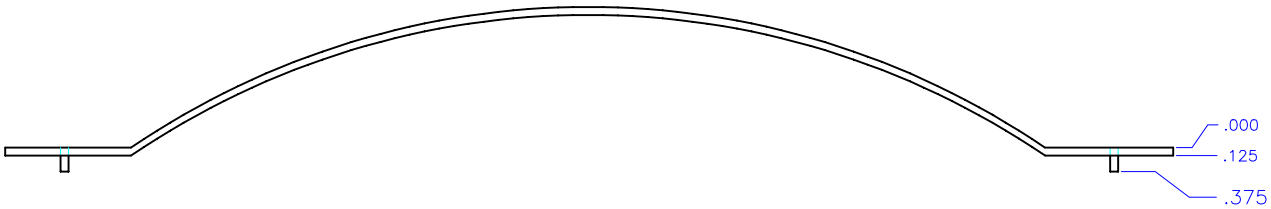

note: I assume that a multi axis wire EDM is the tool for cutting this. We can supply the DXF or IGES file for this. The inital cup shape could be spun or turned but should be sanded smooth to remove all machining marks. (to 800 grit) It could even be welded from two pieces if necessary and the welding ground and sanded out. This part can be made from aluminum if necessary but we would prefer stainless. Grade is only important in considering finish. We want to electropolish it to a high luster.

nm: Rete.VLM		
sc: 1:3	dt: 10/22/98	p#: 5501.2
The Long Now Foundation		
tol. +/- .020 (shape) +/-.005 (pin holes)		
Matl: Stainless Steel		
Qty: 2 required		

Rete Calculations

City Lat	Name	Angle Deg	Lat Deg	Angle Radians	Latitude	Height	Offset	Radius
	Cel Equator	0	0	0	0	0	0	2
	Zenith	0	90	0	1.570796327	1	0	0
	Pole	23.5	90	0.410152374	1.570796327	1	0.416000598	0
	Tropic Can	23.5	23.5	0.410152374	0.410152374	0.398749069	0.606089524	1.393910476
	Tropic Cap	23.5	-23.5	0.410152374	-0.410152374	-0.398749069	1.538647896	3.538647896
	Meridian 6pm	66.5	0	1.160643953	0	0	4.599685094	5.015685693
34	LA max	-32.5	0	-0.567232007	0	0	-1.274140522	2.371378095
	LA Min	79.5	0	1.387536755	0	0	10.79103435	10.97480853
51	London max	-15.5	0	-0.270526034	0	0	-0.554649088	2.075484428
	London Min	62.5	0	1.090830783	0	0	3.841964254	4.33136114
37.8	SF max	-28.7	0	-0.500909495	0	0	-1.094968016	2.280121698
	SF Min	75.7	0	1.321214244	0	0	7.846312588	8.097198357
34	LA max	-32.5	0	-0.567232007	0	0	-1.274140522	2.371378095
	LA Min	79.5	0	1.387536755	0	0	10.79103435	10.97480853
	longitude	66.5	0	1.160643953	0	0	4.599685094	5.015685693
								2*SQRT(1-G^2)/(G+COS(E))
							2*SIN(E)/(G+COS(E))	

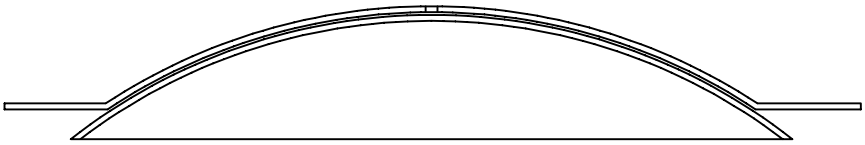

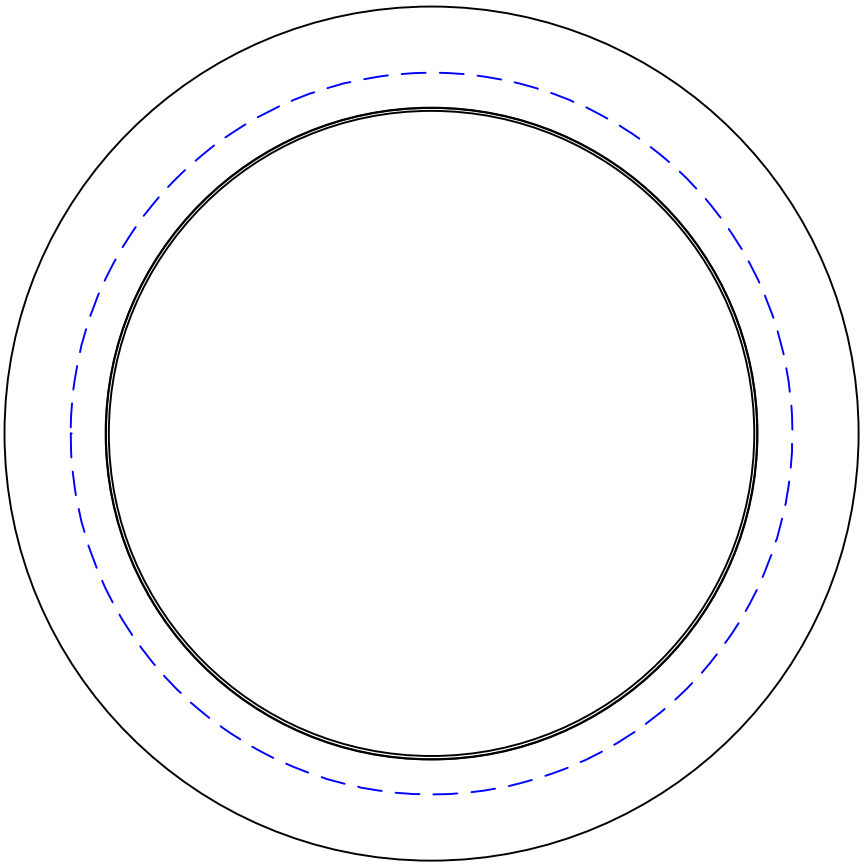

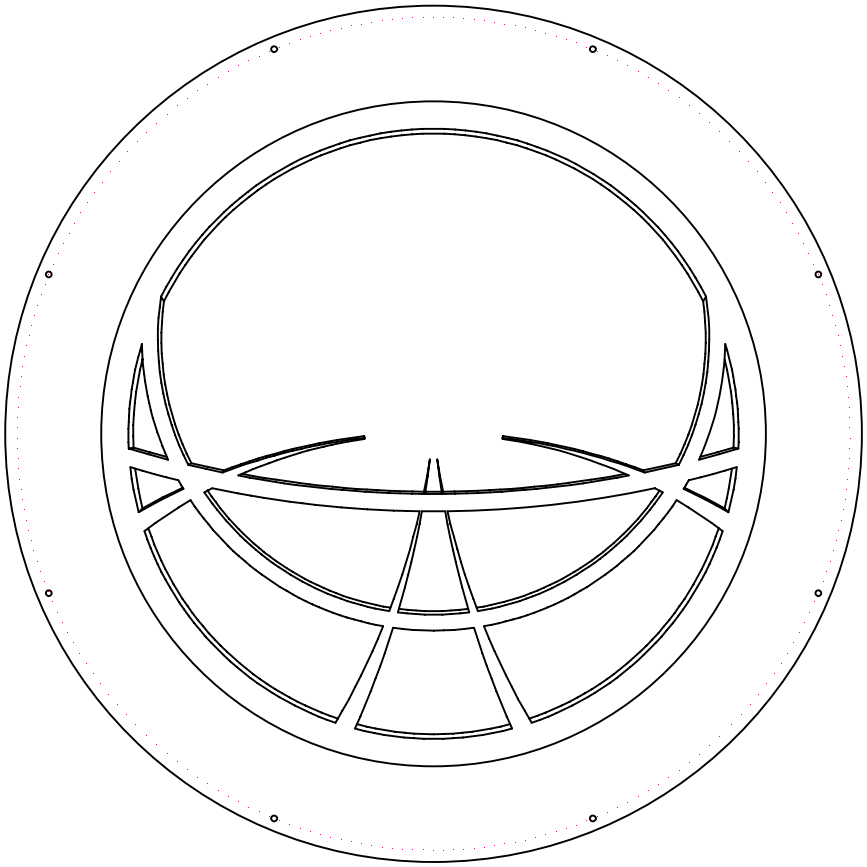

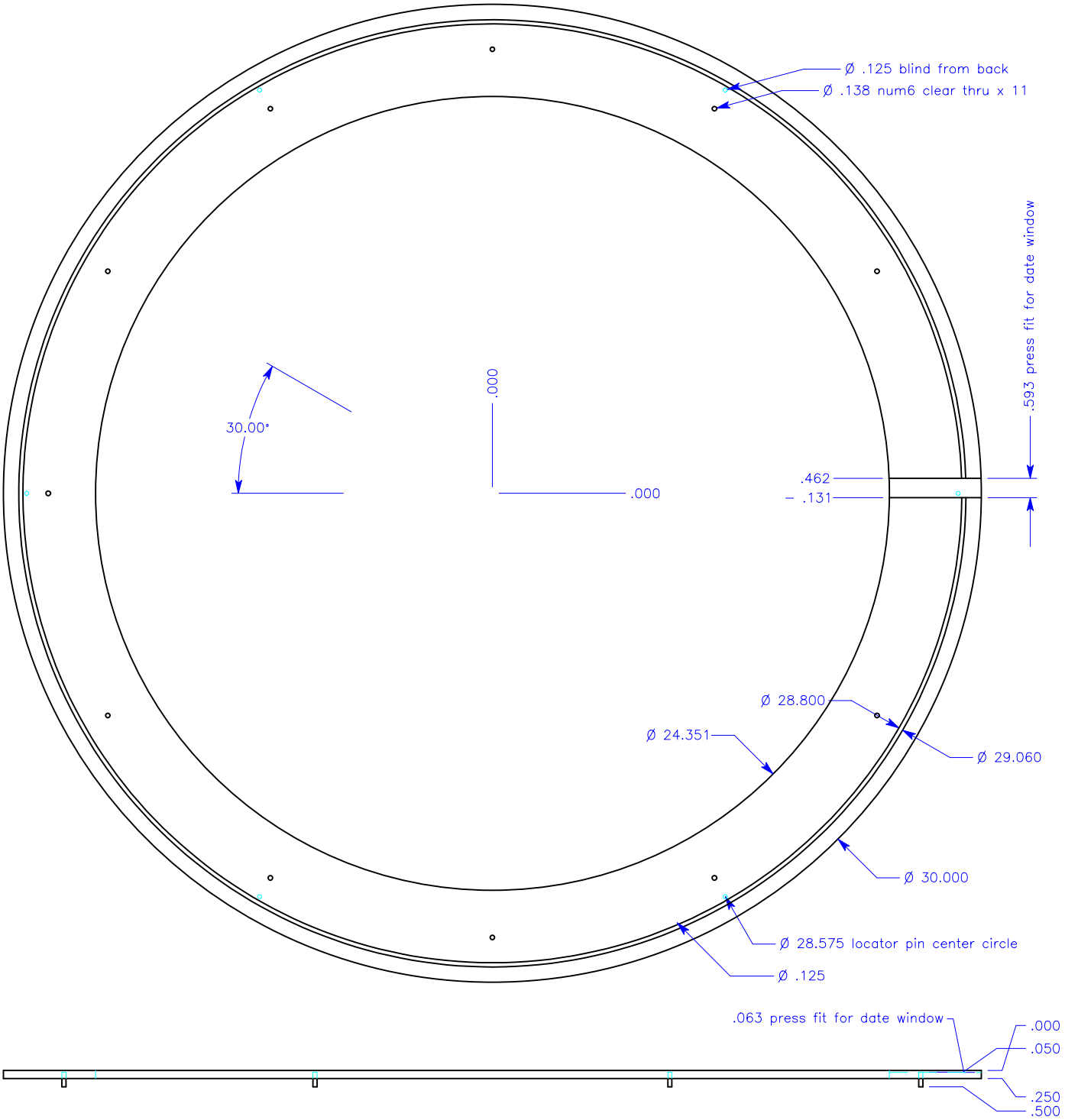

note: The stripe on the right is a machined goove .063" deep. Edge and top finish are most crucial here, these are the most visible parts on the clock, every measure should be taken to be sure they are not scratched or bent. Parts should be flat to within .010". The locater pins underneath should be same material as plate. They can be located by spot facing blind holes from the bottom, pressed in and then loctited in place. Most important is that there is no discoloration or show through to front. They take almost no lateral load and are primarily for location.

nm: OutterSpacer.VLM		
sc: 1:4	dt: 1/27/00	p#: 5508.5
The Long Now Foundation		
tol. +/-.005 (locator pins)		
Matl: Stainless Steel		
Qty: 2 required		

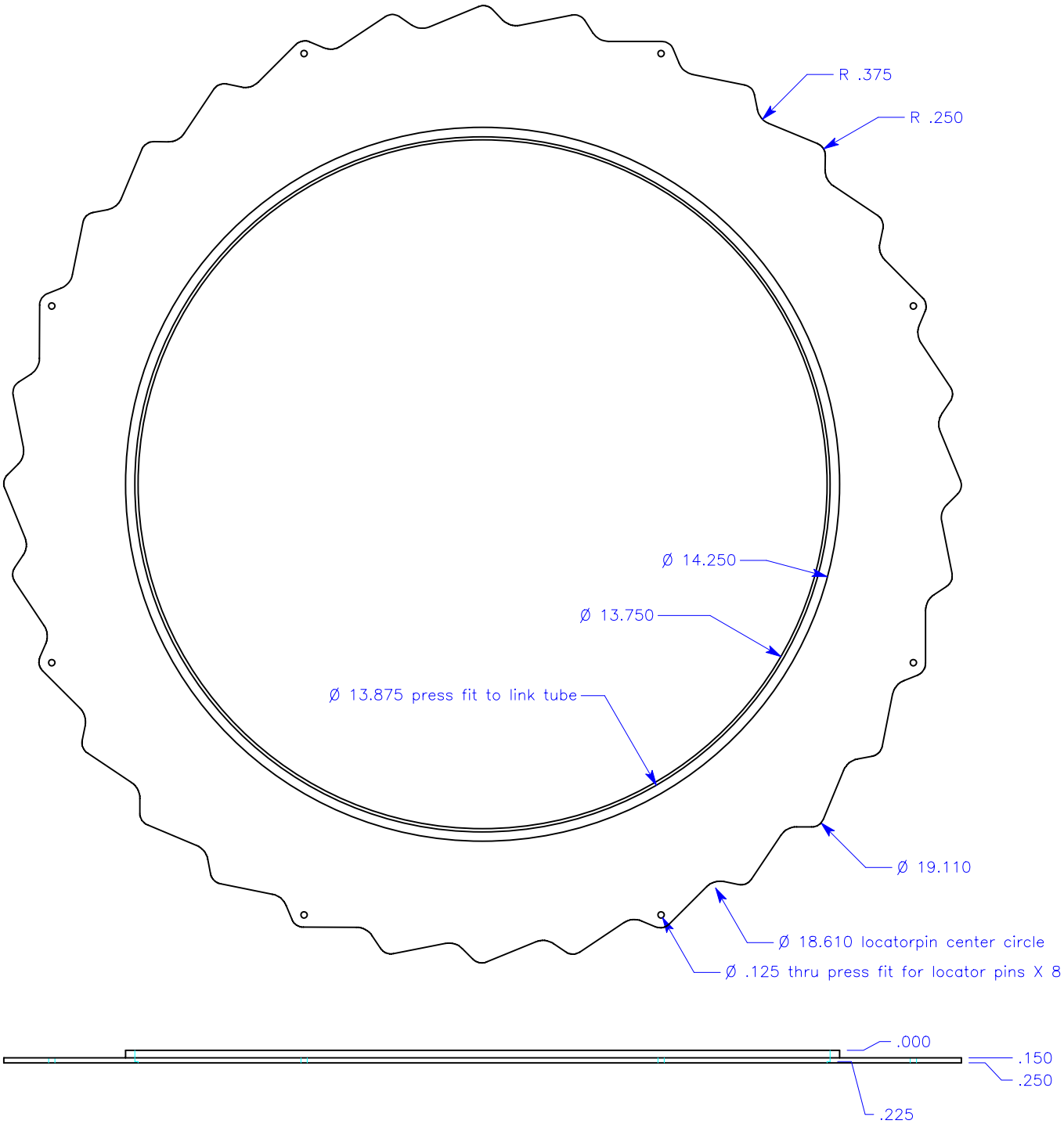

note: These are highly visible parts on the clock, every measure should be taken to be sure they are not scratched or bent. Parts should be flat to within .010". The rabbet machined into the inner /upper side of the ring is to .200" depth and needs to press fit onto the link tube p#5503. The outter surface is machined down .150" leaving .100".

nm: MooUprSpacern.VLM		
sc: 1:3	dt: 4/6/00	p#: 5510.3
The Long Now Foundation		
tol. +/- .005		
Matl: 303 Stainless Steel, Blanchard Ground		
Qty: 1 required		

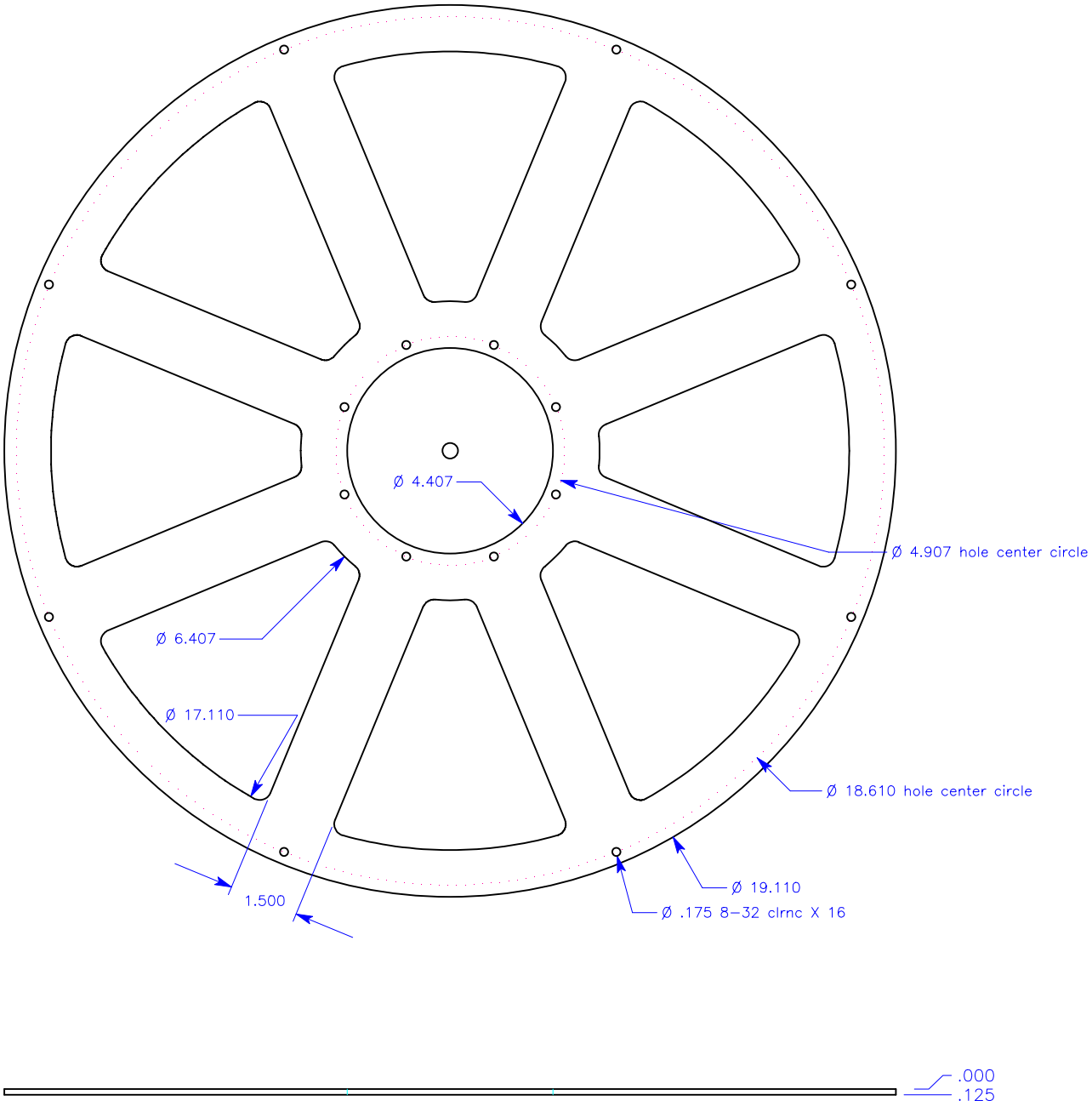

note:.Pie shaped opening are for aesthetic improvement and weight reduction. Tolerances here are not as critical. They have 1.5" wide spokes with 1" distance from both internal and outter diameters. Their internal corners are radiused to .25".

nm: MoonSubSpacer.VLM		
sc: 1:3.5	dt: 11/4/98	p#: 5513.2
The Long Now Foundation		
tol. +/-.005 (locator pins)		
Matl: 70-75 Al		
Qty: 2 required		

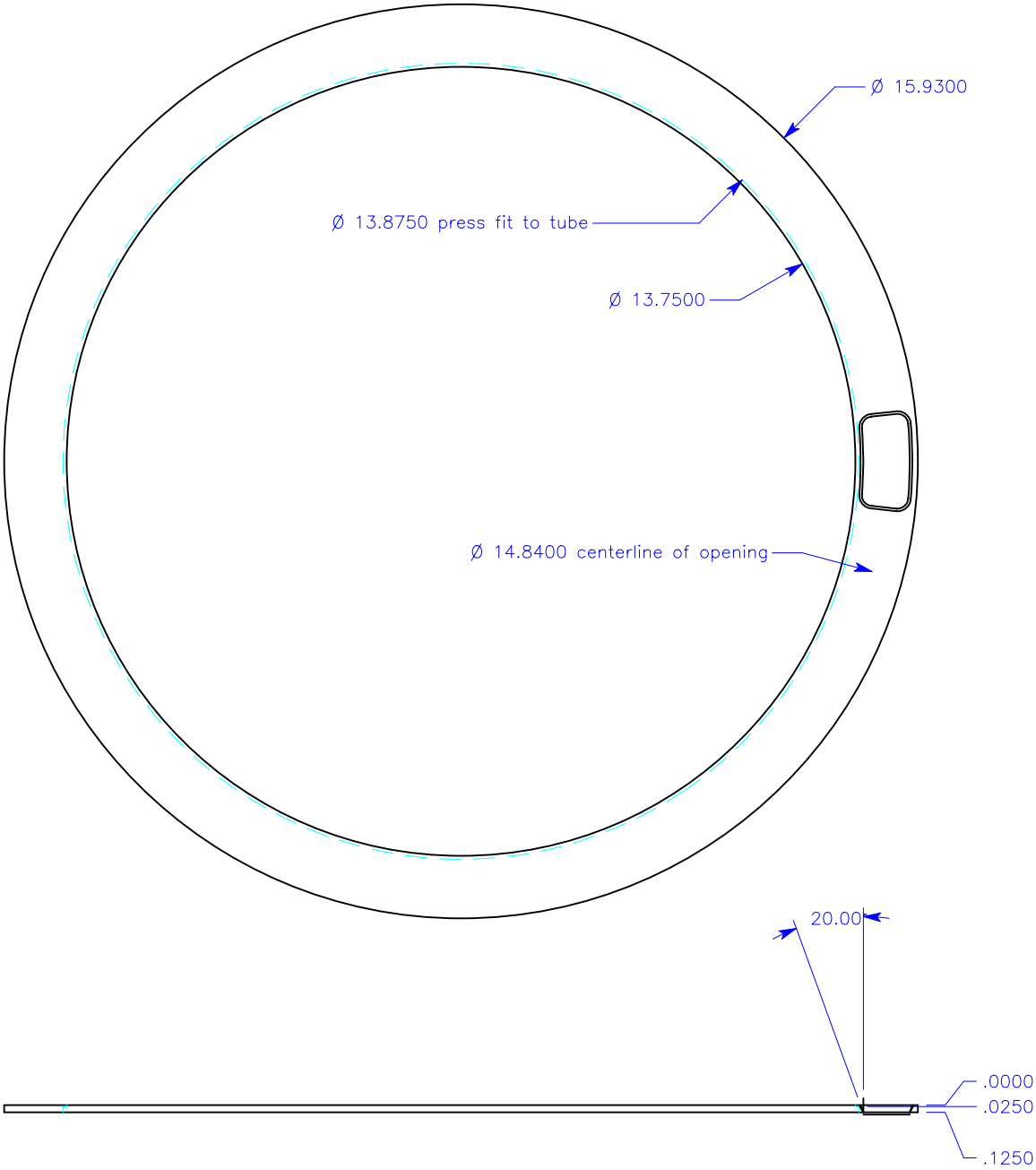

note: Edge and top finish are most crucial here, these are the most visible parts on the clock, every measure should be taken to be sure they are not scratched or bent. Parts should be flat to within .010". The rabbet machined into the inner/under side of the ring is to .100" depth and needs to press fit onto the link tube p#5503. flat can be left on window opening.

nm: Moon.VLM		
sc: 1:3	dt: 04/06/00	p#: 5502.3
The Long Now Foundation		
tol. +/- .005		
Matl: Stainless Steel, blanchard ground		
Qty: 1 required		

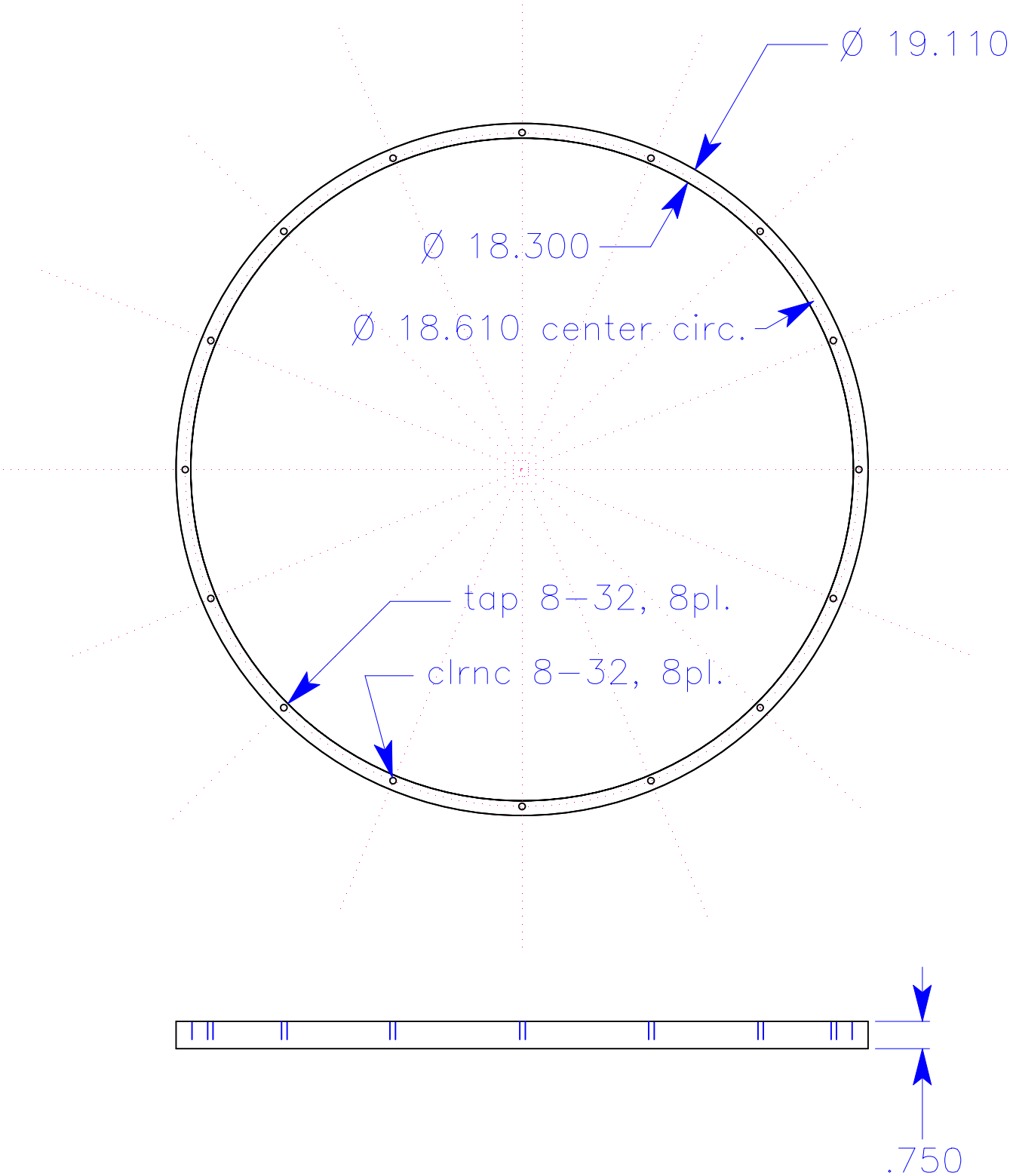

note: Every other hole is tapped or clearance for 8-32 screws each is 22.5 degrees from the otherspacing evenly around the circle. (eg. This makes a tapped holes 45 degrees from eachother)

nm: MoonSubSpaceRing.VLM		
sc: 1:4	dt: 12/13/98	p#: 5603.1
The Long Now Foundation		
tol. +/- .005" on holes .010" on flatness and shape		
Matl: SS		
Qty: 1 required		

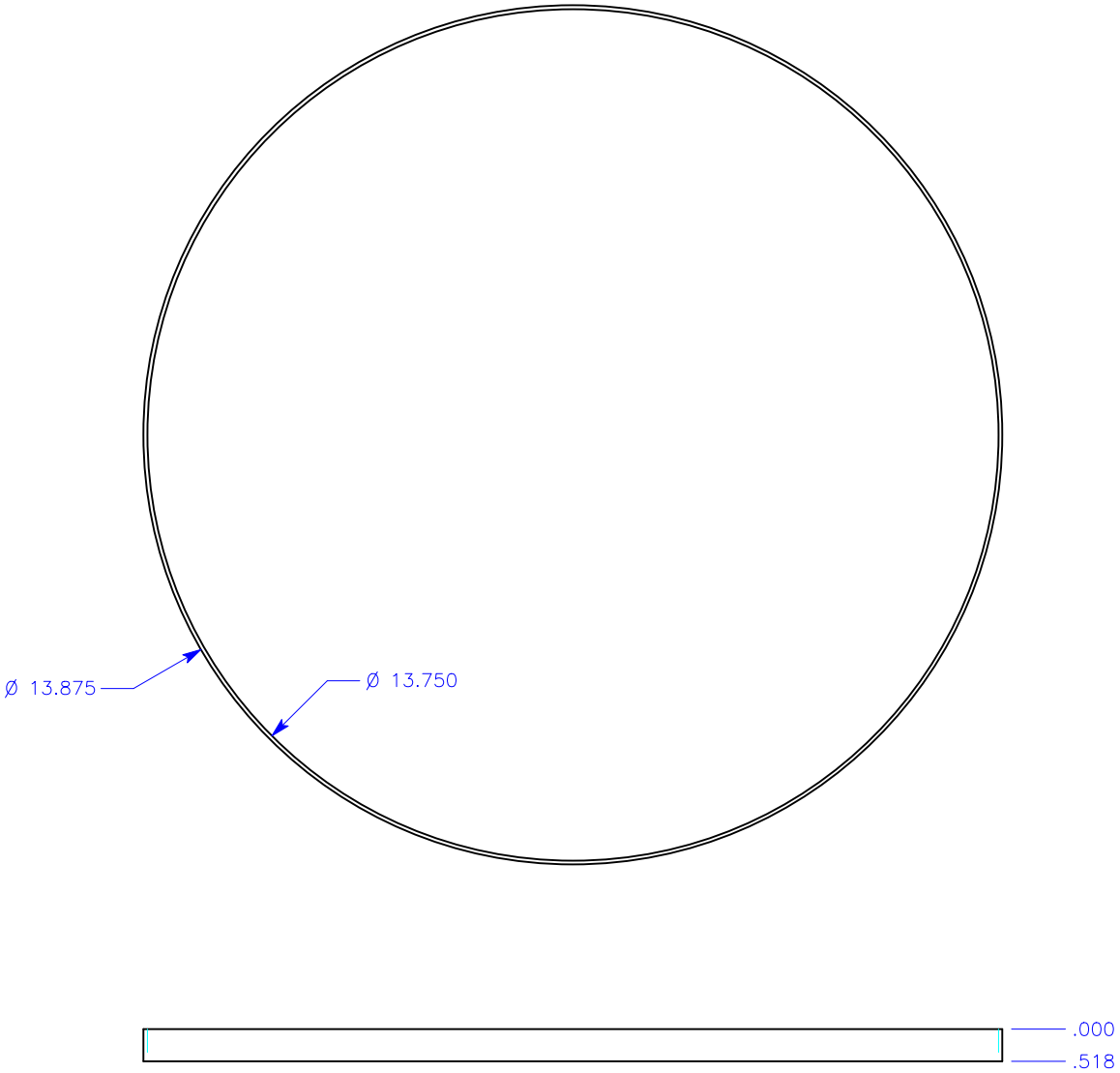

These are highly visible parts on the clock, every measure should be taken to be sure they are not scratched or bent.

nm: MoonLinkTube.VLM		
sc: 1:3	dt: 10/22/98	p#: 5503.2
The Long Now Foundation		
tol. +/- .005		
Matl: Stainless Steel, tumble deburred		
Qty: 2 required		

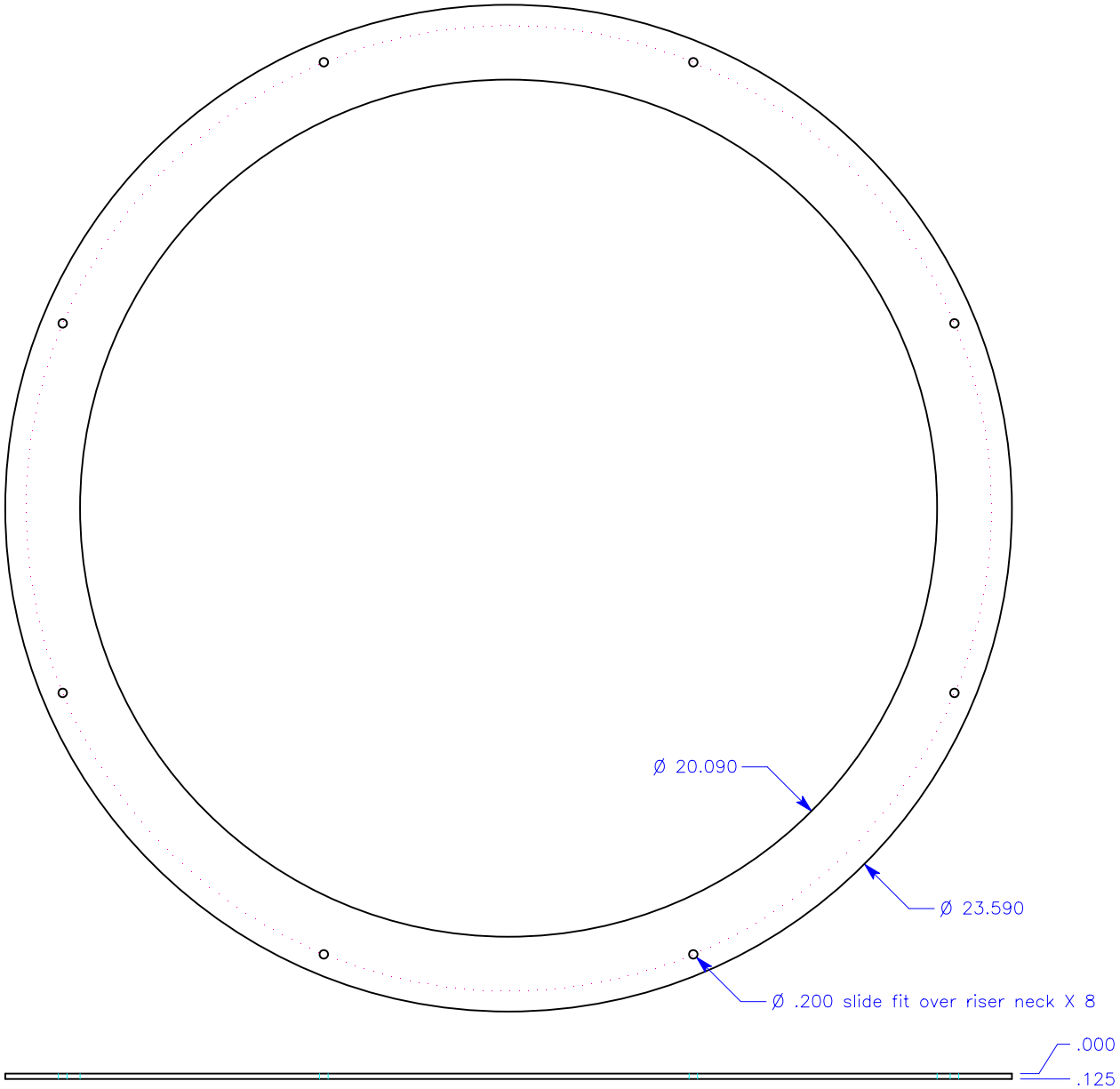

These are highly visible parts on the clock, every measure should be taken to be sure they are not scratched or bent. Matte finished parts should be handled super carefully after bead blasting to avoid finger and grease prints until they can be clear coated.

nm: InnerSpacer.VLM		
sc: 1:3.5	dt: 10/22/98	p#: 5505.2
The Long Now Foundation		
tol. +/- .005		
Matl: Stainless Steel, bead blasted matte finish		
Qty: 2 required		

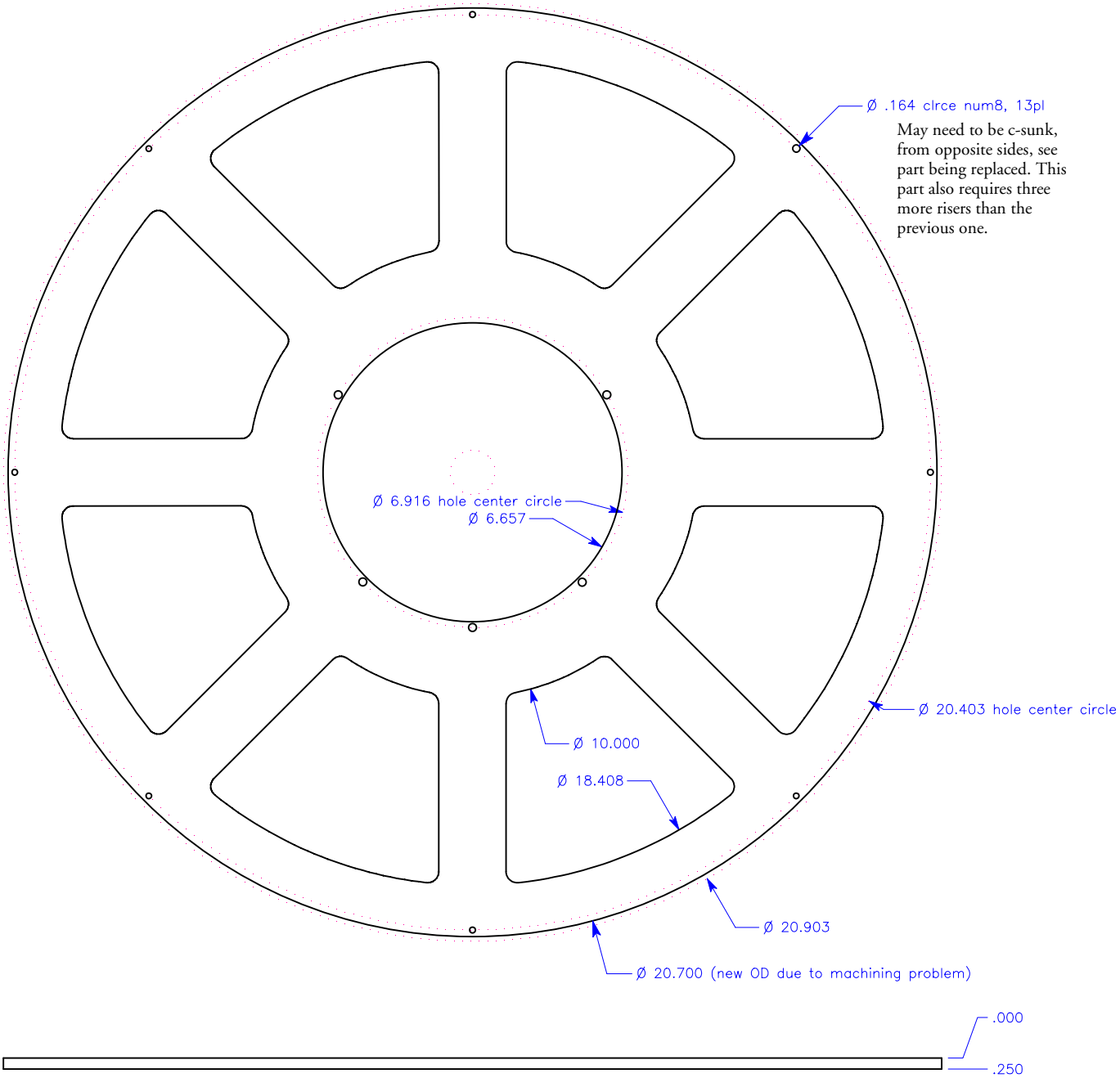

note: Pie shaped opening are for aesthetic improvement and weight reduction. Tolerances here are not as critical. They have 1.25" wide spokes. Their internal corners are radiused to .25".
PLATING: Nickel NO PLUGS all holes clearance.

nm: HorizonSubSpacer2.VLM		
sc: 1:3.5	dt: 4/4/00	p#: 5516.4
The Long Now Foundation		
tol. +/-.005		
Matl: 60-61 Al		
Qty: 1 required		

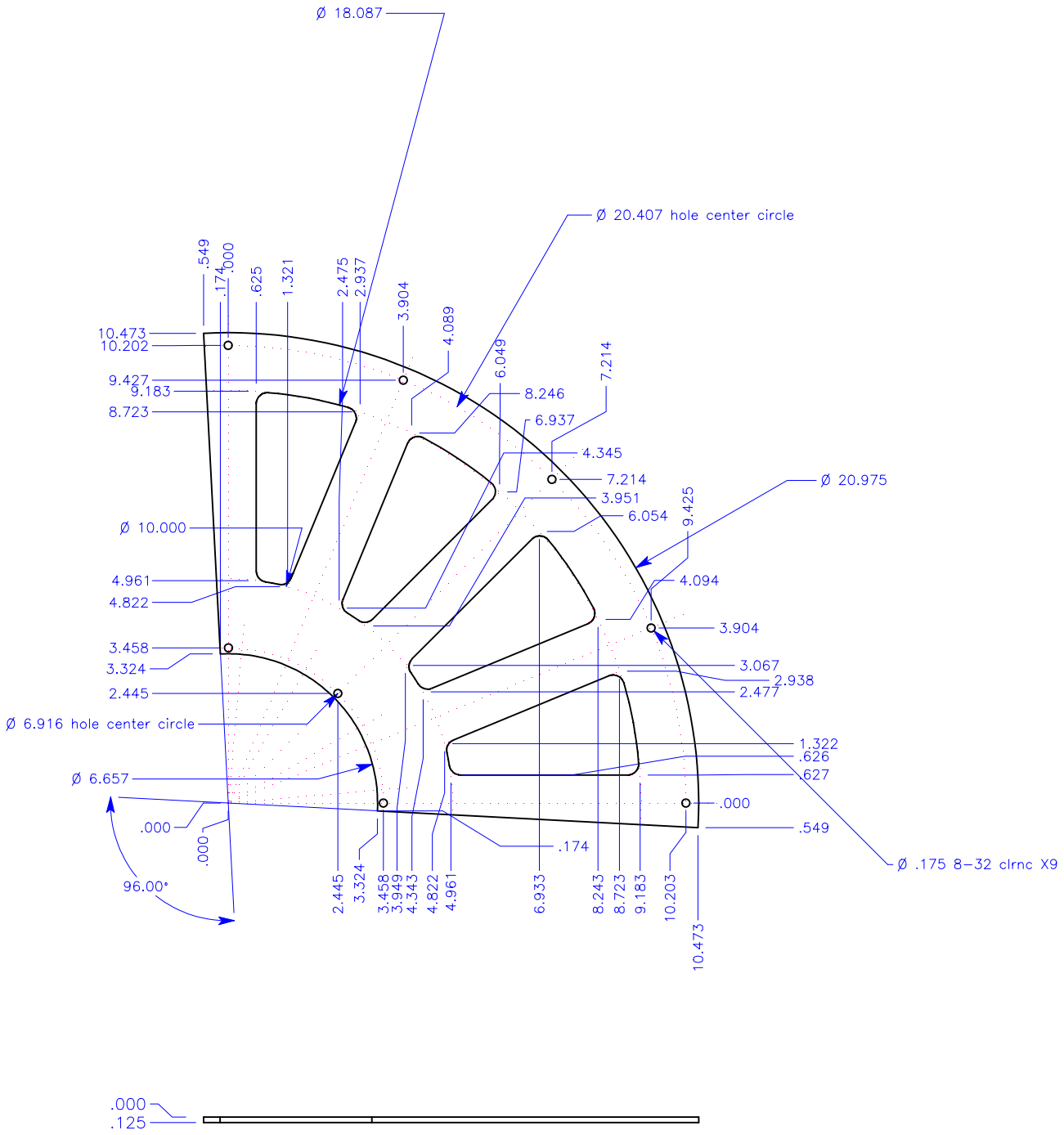

note: Pie shaped opening are for aesthetic improvement and weight reduction. Tolerances here are not as critical. They have 1.25" wide spokes. Their internal corners are radiused to .25".

nm: HorizonSubSpacer2.VLM		
sc: 1:3.5	dt: 10/20/99	p#: 5516.3
The Long Now Foundation		
tol. +/-.005		
Matl: 70-75 Al		
Qty: 2 required		

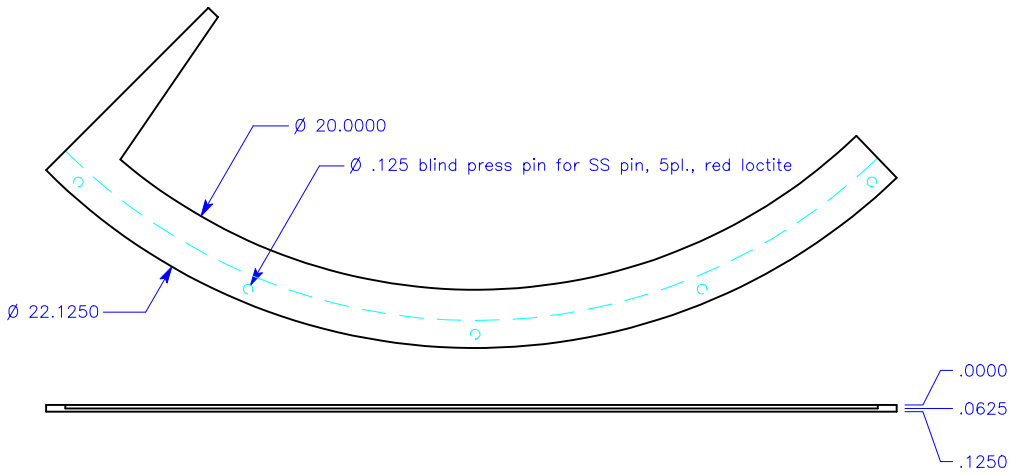

notes: This is a display part. Aesthetic appearence is of primary concern. Material should be flat to within spec'd tolerances and have no scratches. Parts should be handled carefully while being machined and finished. Each part should be wrapped individually in bubble wrap or something comparable. Holes shown to .100 depth and are blind with a flat bottoms. They do not pierce through the top surface or show in any way. Dowel pins should be press fit into holes with loctite.

nm: HorizonInd1.VLM		
sc: 1:3	dt: 4/4/99	p#: 5522.2
The Long Now Foundation		
tol. +/- .005 on shape, +/-.001 on holes		
Matl: 303 Stainless Steel, blanchard ground		
Matl: bought 3/16, ground to size		
Qty: 1 required		

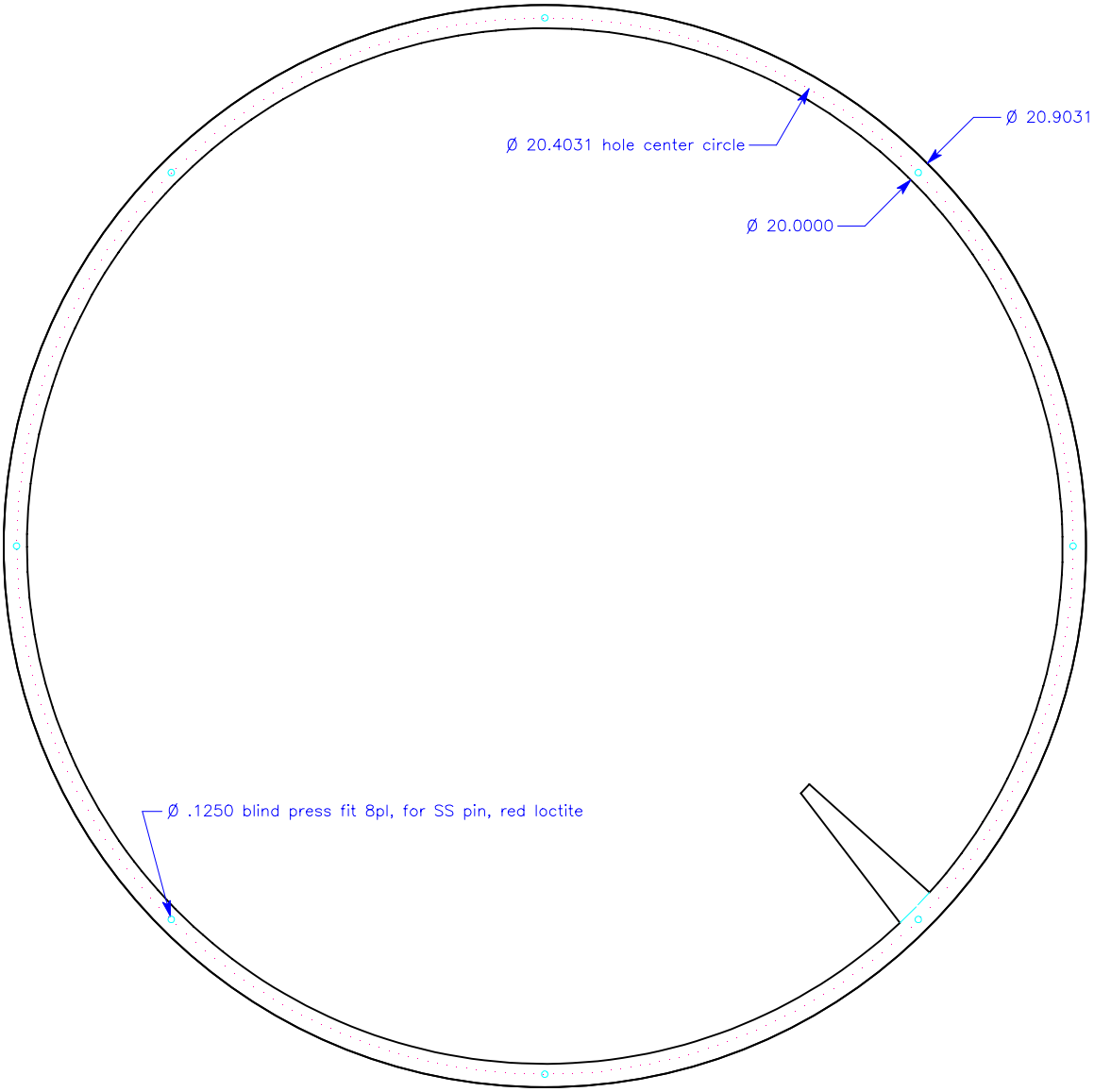

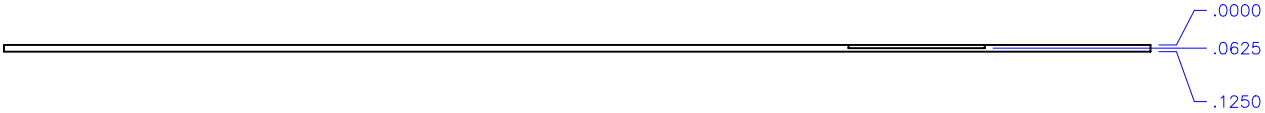

notes: This is a display part. Aesthetic appearence is of primary concern. Material should be flat to within spec'd tolerances and have no scratches. Parts should be handled carefully while being machined and finished. Each part should be wrapped individually in bubble wrap or something comparable. Holes shown to .100 depth and are blind with a flat bottoms. They do not pierce through the top surface or show in any way. Dowel pins should be press fit into holes with loctite.

nm: HorizonInd2.VLM		
sc: 1:3	dt: 4/4/00	p#: 5523.2
The Long Now Foundation		
tol. +/- .005 on shape, +/-.001 on holes		
Matl: 303 Stainless Steel, blanchard ground		
Matl: bought 3/16, ground to size		
Qty: 1 required		

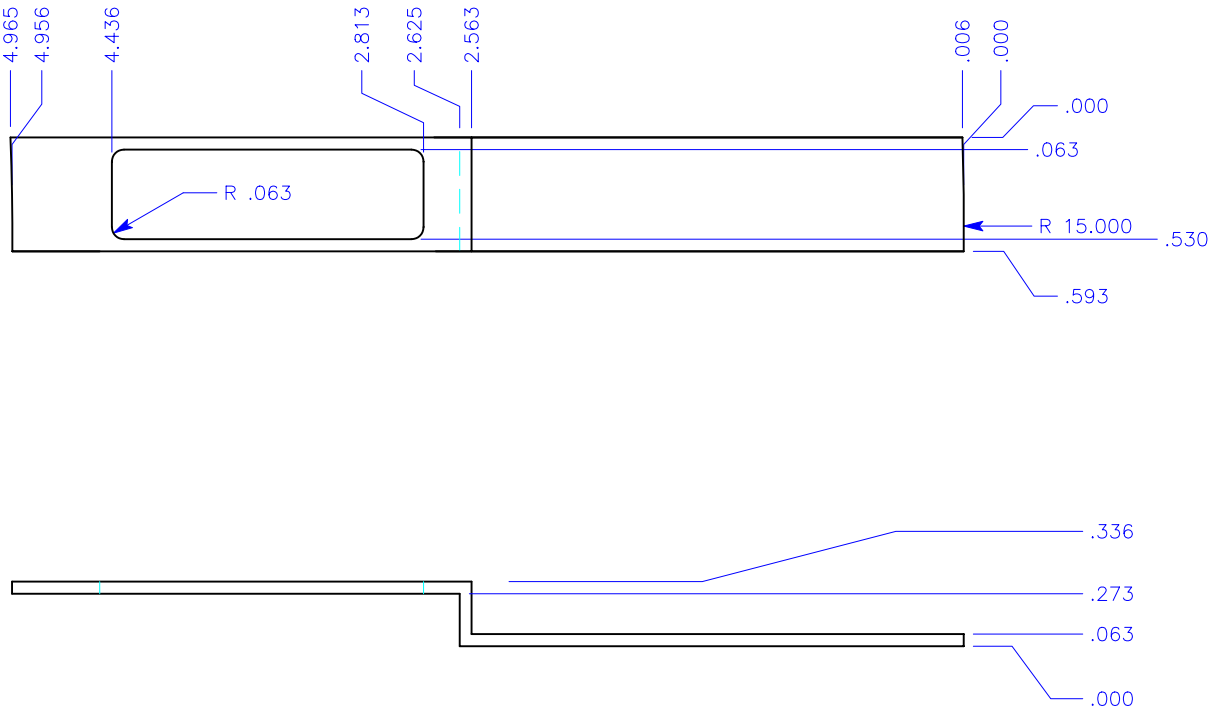

nm: DateWindow.VLM		
sc: 1:1	dt: 10/22/98	p#: 5509.1
The Long Now Foundation		
tol. +/- .005		
Matl: Brass		
Qty: 1		

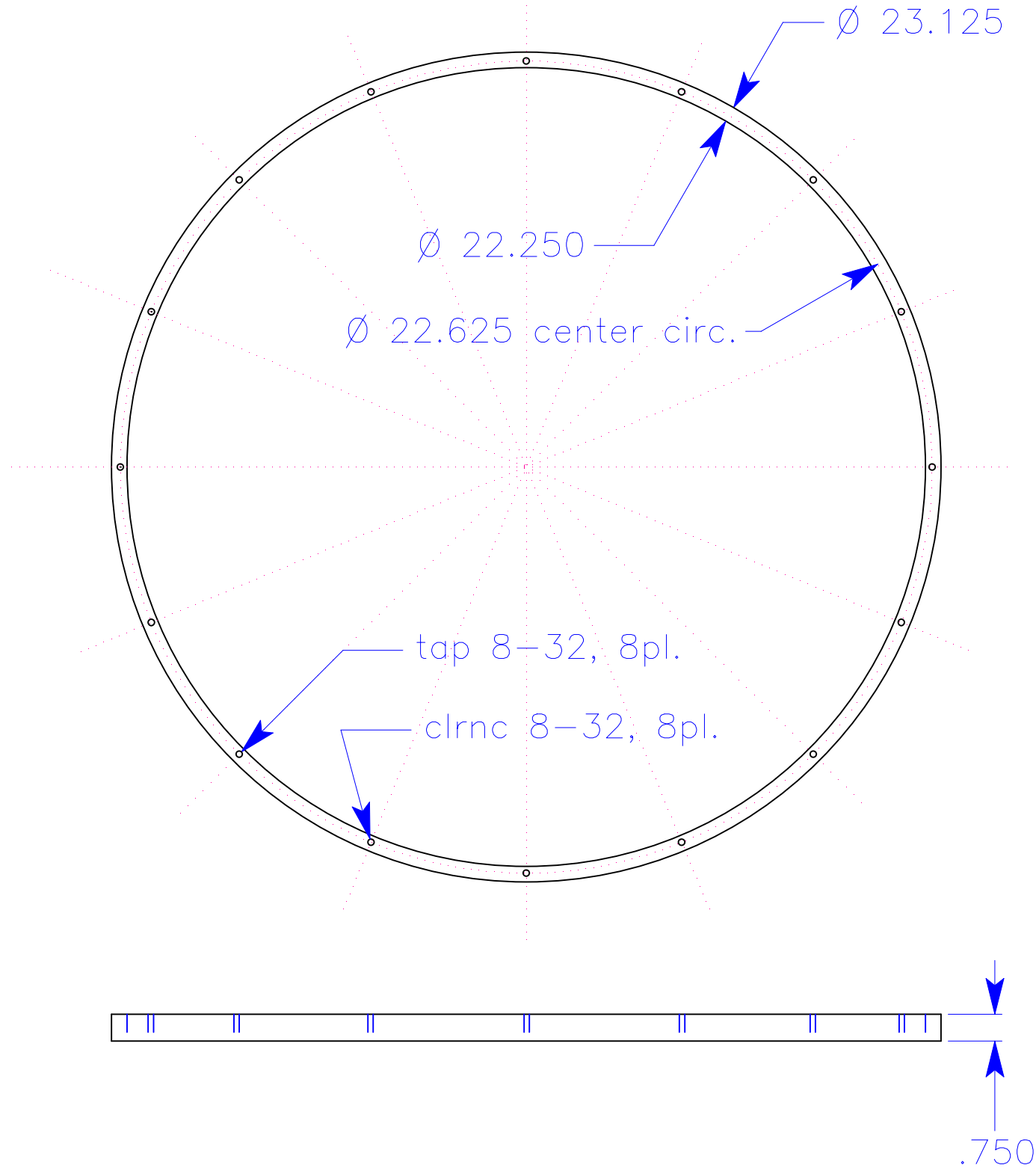

note: Every other hole is tapped or clearance for 8-32 screws each is 22.5 degrees from the otherspacing evenly around the circle. (eg. This makes a tapped holes 45 degrees from eachother)

nm: CenturyrSubSpaceRing.VLM		
sc: 1:4	dt: 12/13/98	p#: 5602.1
The Long Now Foundation		
tol. +/- .005" on holes .010" on flatness and shape		
Matl: SS		
Qty: 1 required		

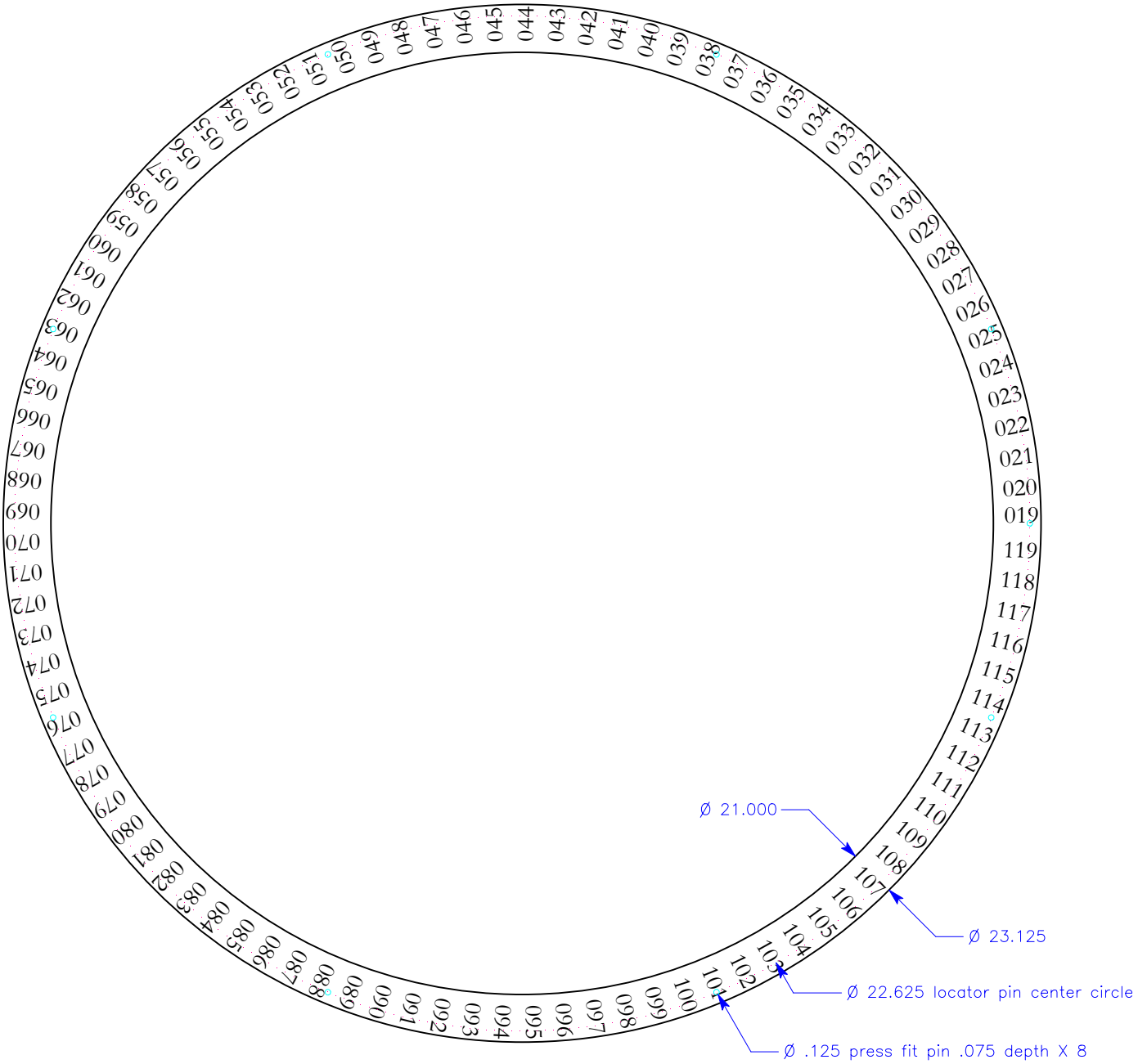

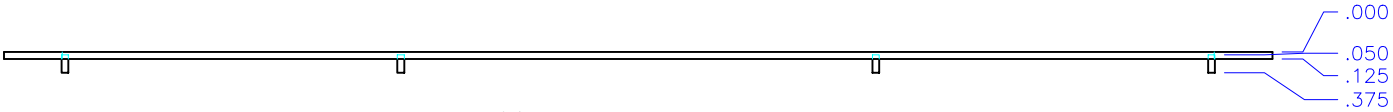

note: [for etcher: The text within the part is etched (font is garamond). Please call to discuss depth depending on etching method. We can supply the DXF file for this.] Edge and top finish are most crucial here, these are the most visible parts on the clock, every measure should be taken to be sure they are not scratched or bent. Parts should be flat to within .010". The locater pins underneath should be same material as plate. They can be located by spot facing blind holes from the bottom, pressed in and then loctited in place. Most important is that there is no discoloration or show through to front. They take almost no lateral load and are primarily for location.

nm: Century.VLM		
sc: 1:3.5	dt: 10/22/98	p#: 5506.2
The Long Now Foundation		
tol. +/- .020 (etch) +/-.005 (locator pins)		
Matl: Stainless Steel		
Qty: 2 required		

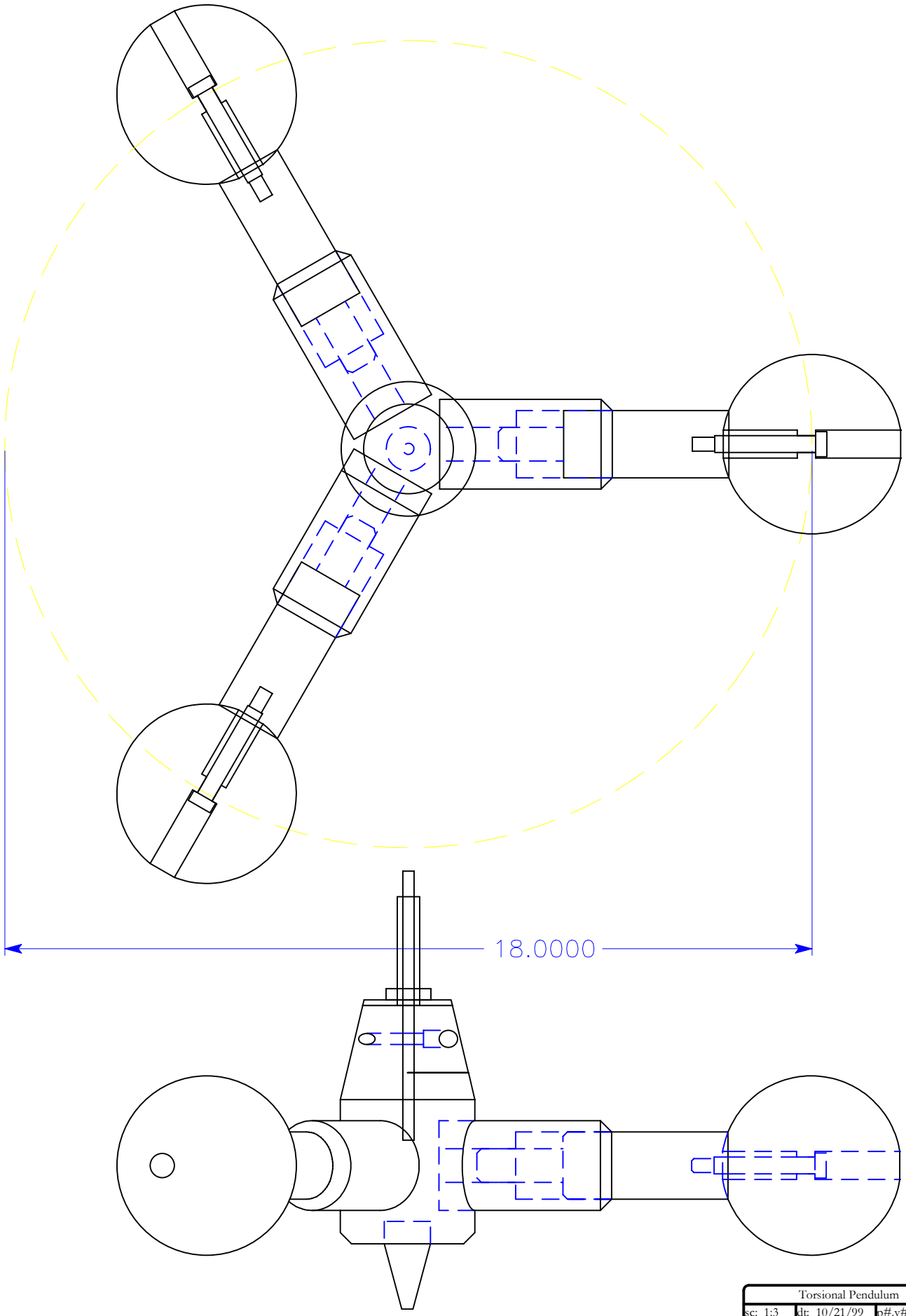

Torsional Pendulum		
sc: 1:3	dt: 10/21/99	p#.v#: 2420
tol. +/- 0.005"		
Matl's: invar, tungsten, SS		
Qty: 1 req.		

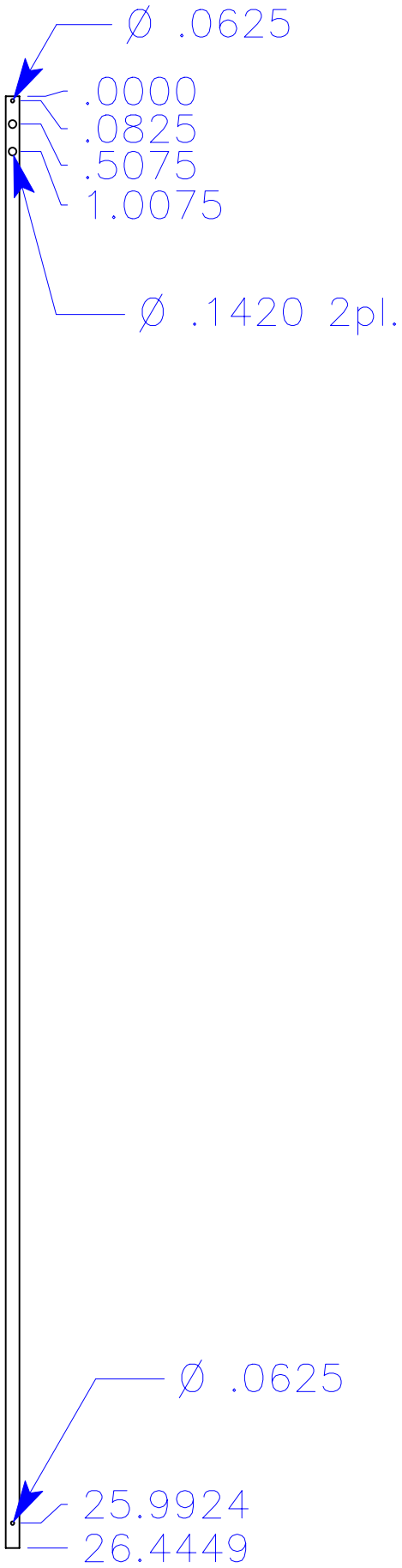

Torsional Pendulum .25" RibbonSpring		
sc: 1:3	dt: 3/2/00	p#.v#: 2410.2
The Long Now Foundation		
tol. +/- 0.001" (+/-.010 on leng.)		
Matl's: Ni Span C .010" thick		
comes in .625" wide roll.		
Qty: 10 each		

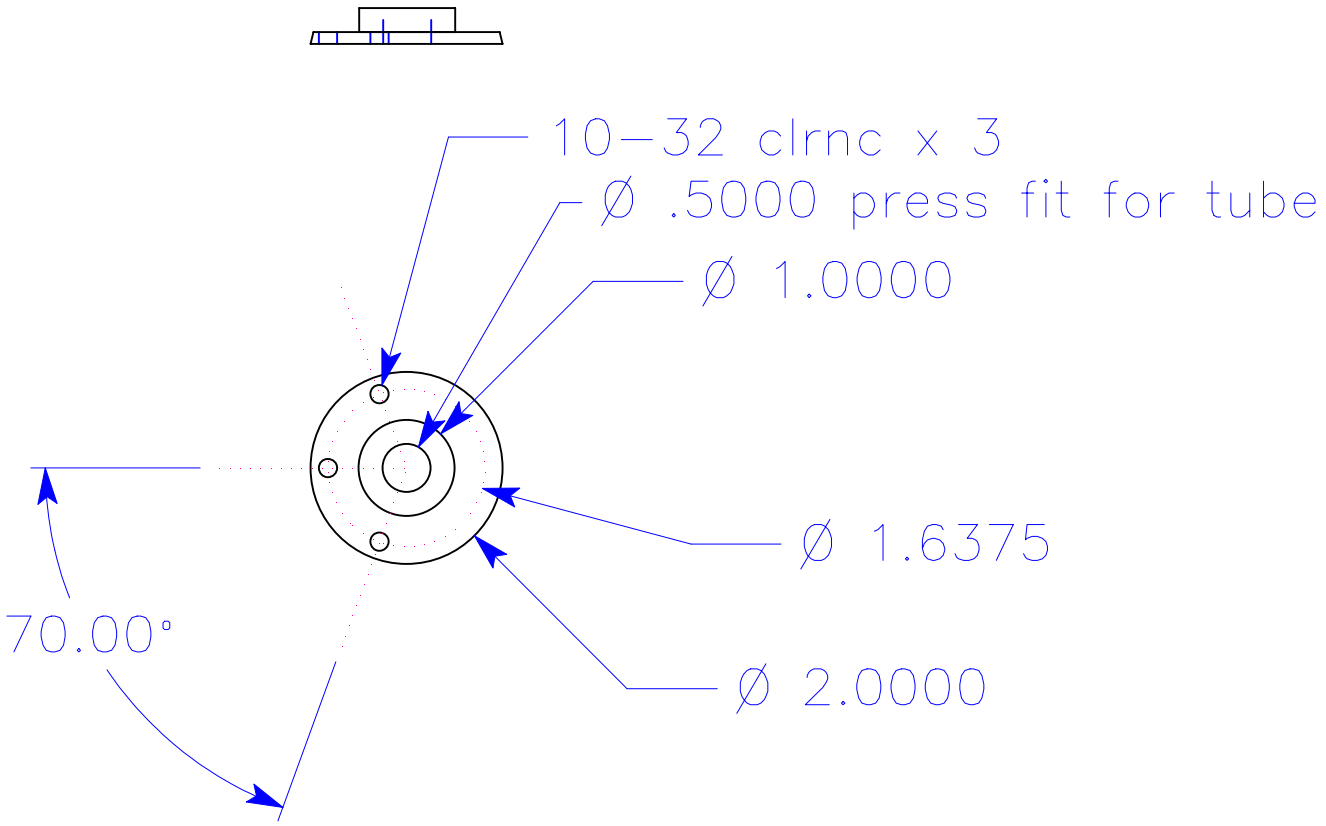

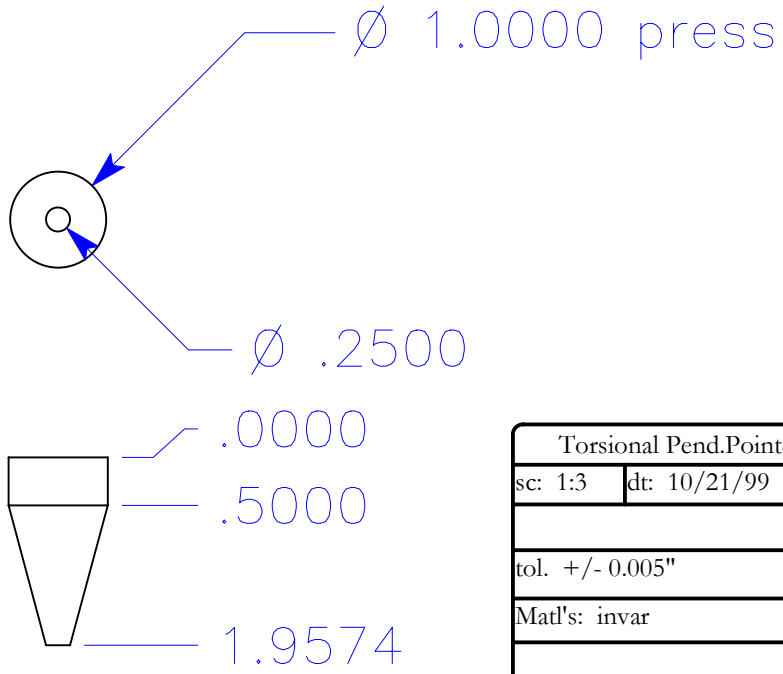

Torsional Pend.Point&tube flange		
sc: 1:3	dt: 10/21/99	p#.v#: 2429.1
tol. +/- 0.005"		
Matl's: invar		
Qty: 1 each req.		

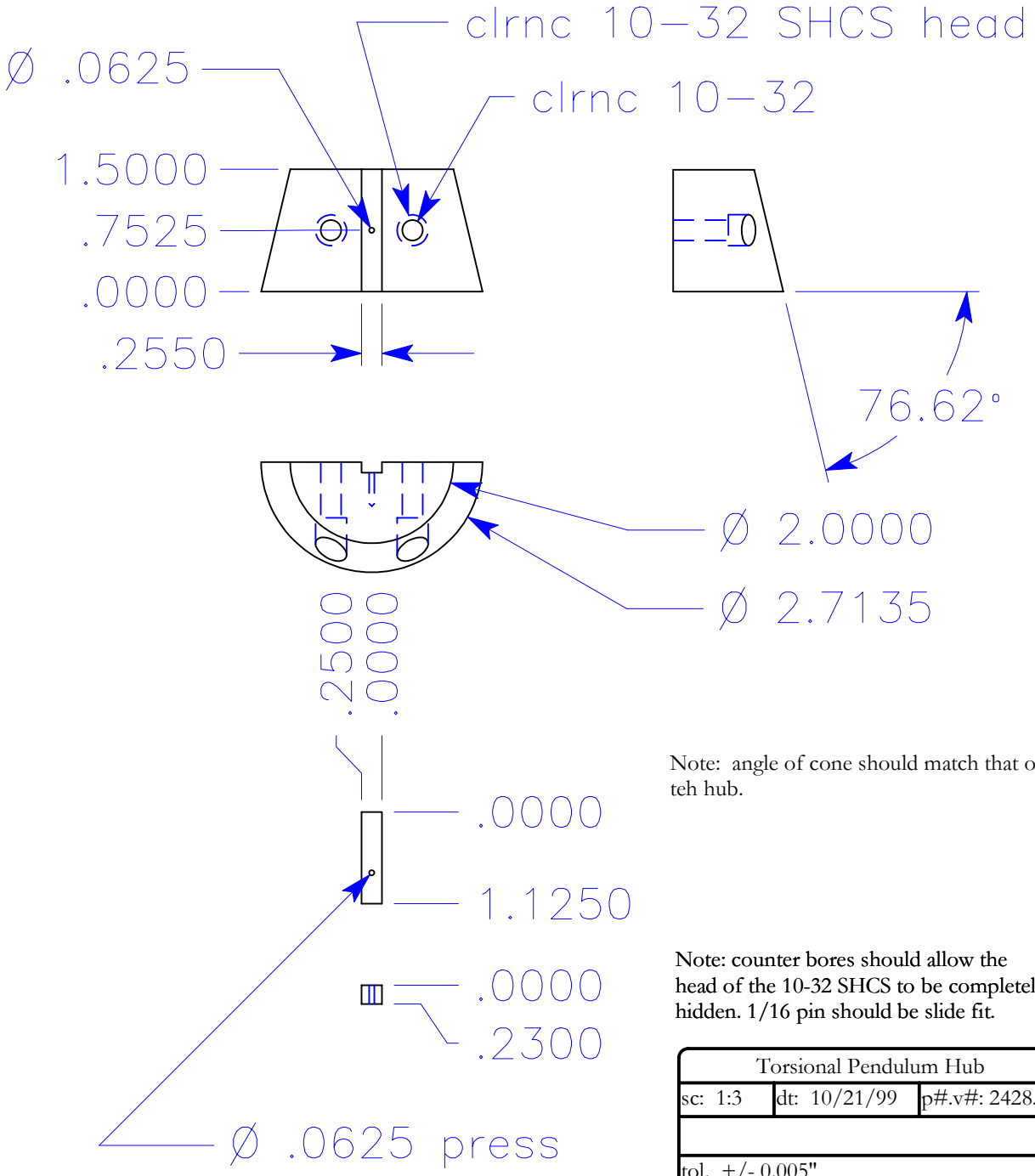

Note: angle of cone should match that of teh hub.

Note: counter bores should allow the head of the 10-32 SHCS to be completely hidden. 1/16 pin should be slide fit.

Torsional Pendulum Hub		
sc: 1:3	dt: 10/21/99	p#.v#: 2428.1
tol. +/- 0.005"		
Matl's: invar		
Qty: 1 each req.		

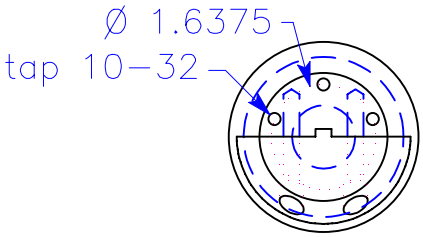

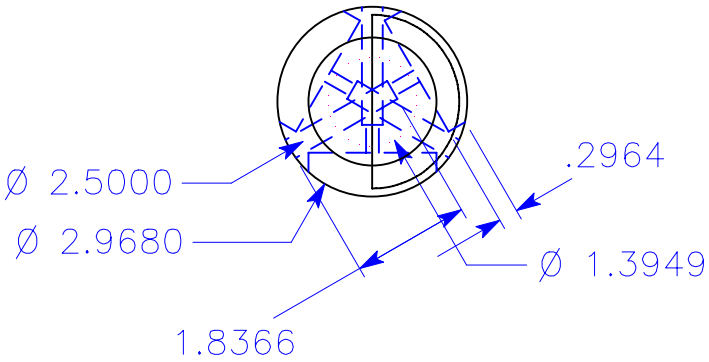

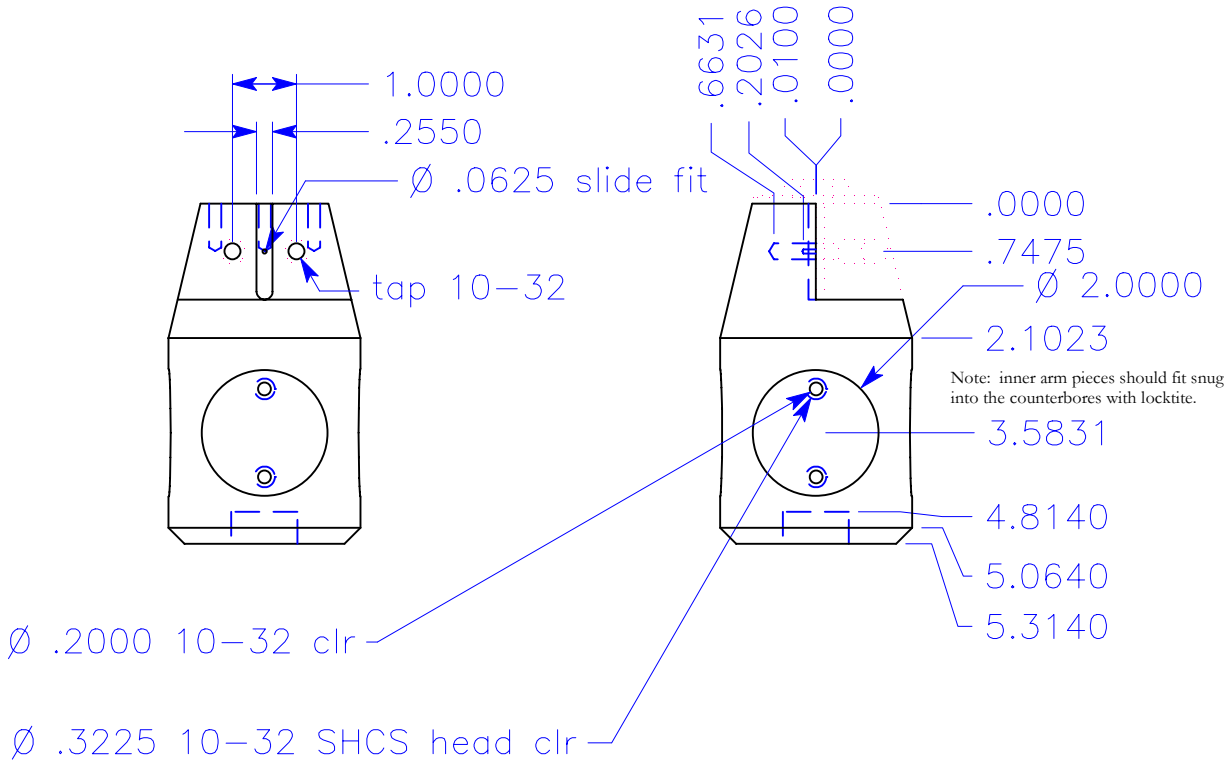

Note: inner arm pieces should fit snug into the counterbores with locktite.

Note: the depth of this c-bore has to allow the head of each screw to be past the center line of the hub so they dont interfere with eachother.

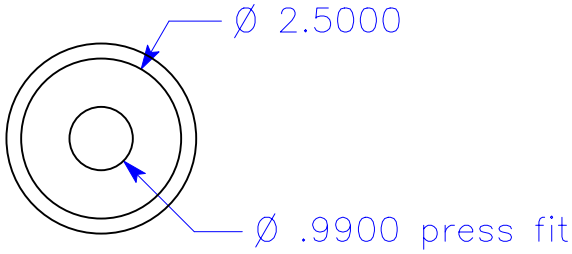

Torsional Pendulum Hub		
sc: 1:3	dt: 10/21/99	p#.v#: 2427.1
tol. +/- 0.005"		
Matl's: invar		
Qty: 1 req.		

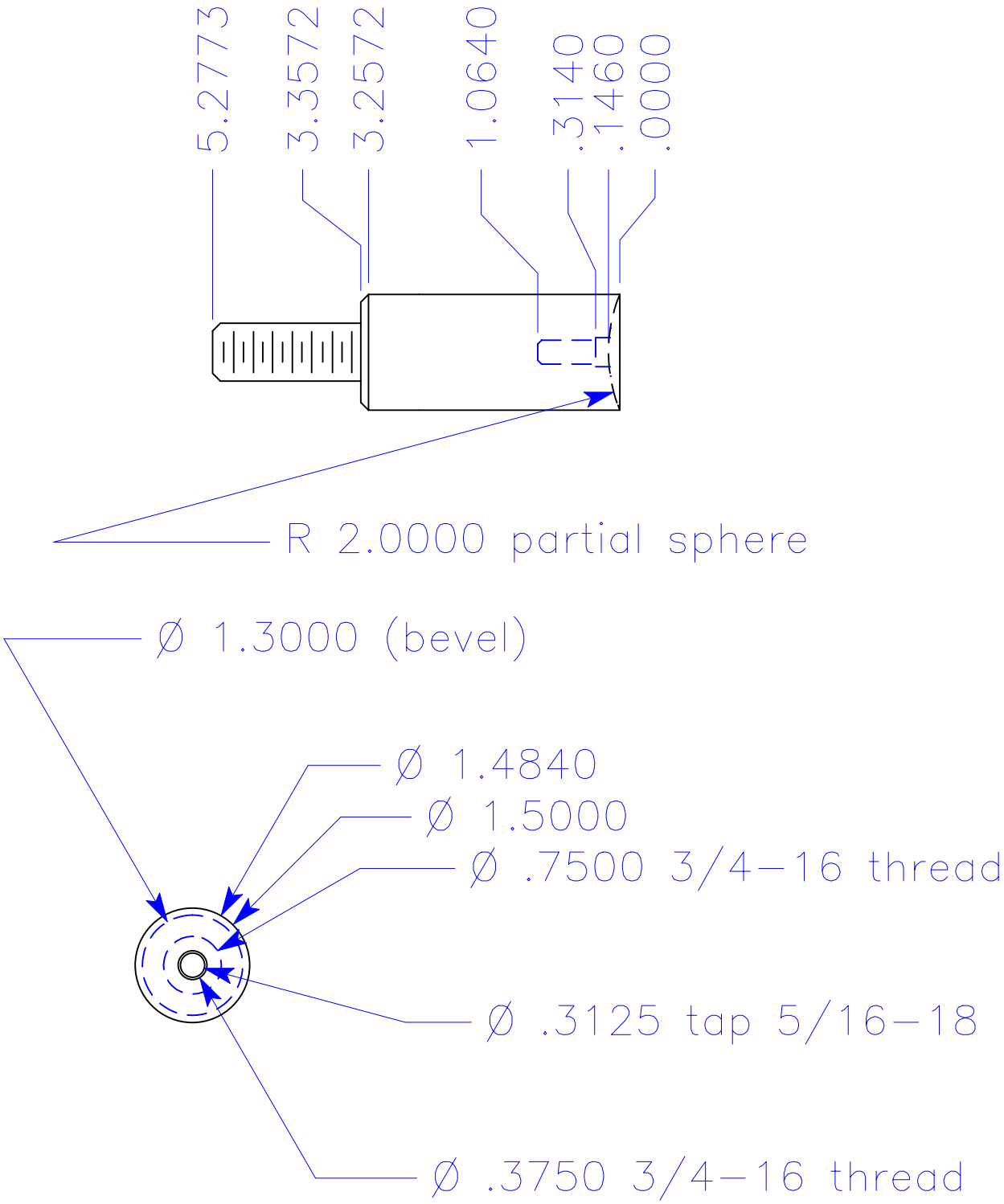

Torsional Pendulum Outter arm		
sc: 1:3	dt: 10/20/99	p#.v#: 2425.1
tol. +/- 0.005"		
Matl's: invar		
Qty: 3 req.		

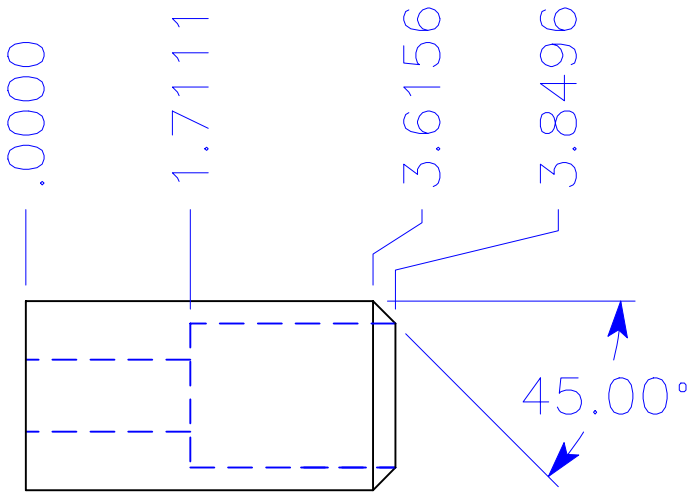

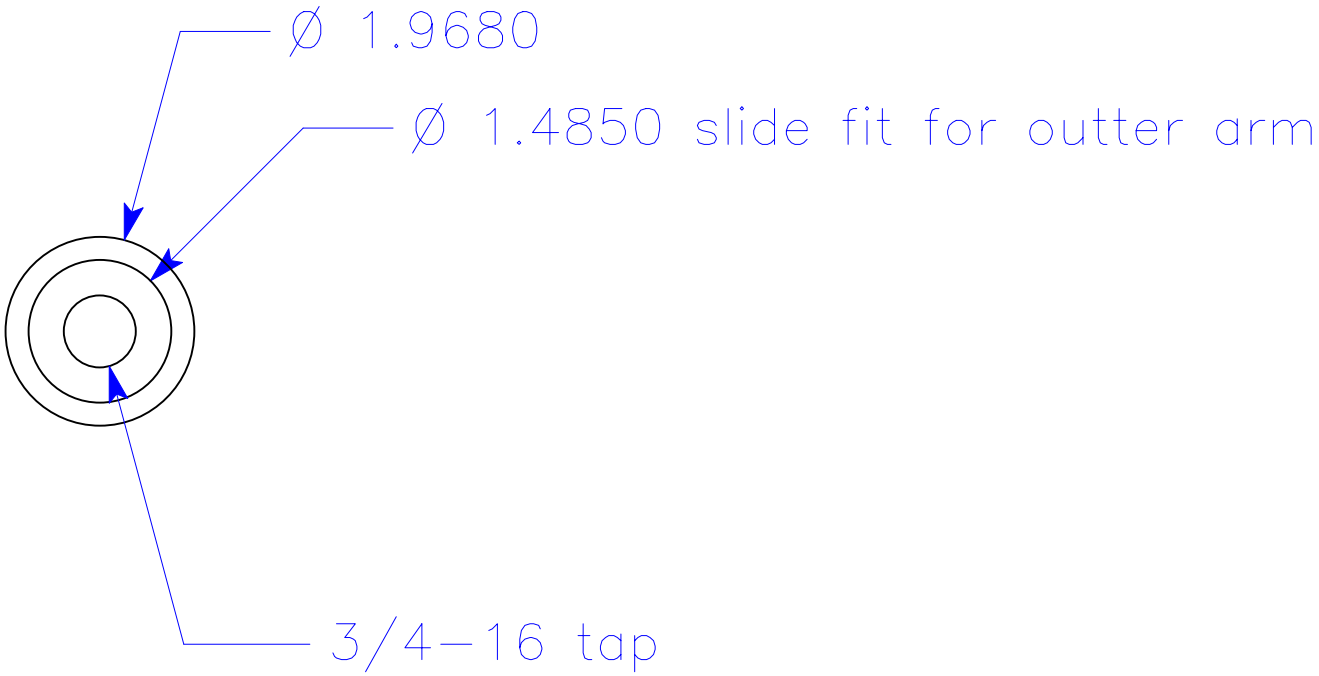

Torsional PendulumInner arm		
sc: 1:3	dt: 10/20/99	p#.v#: 2426.1
tol. +/- 0.005"		
Matl's: invar		
Qty: 3 req.		

Torsional Pendulum Calculation

Units are pounds, inches, radians

```
inertia = 13.9 inch pound sec^2;
TotalWeight = 83.6 pound
```

```
83.6 pound
```

constants

```
ShearModulus = 11.57*^6 pound / inch ^2;
ElasticModulus = 29*^6 pound / inch ^2;
ShearModulusRoak = 9.78*^6 pound / inch ^2;
TensileStrength = 125000 pound / inch^2;
G = 32.16 * 12 inch / sec ^2;
ElasticModulus / ShearModulus
```

```
2.50648
```

Rectangular Torsion Spring

```
h = 0.5 inch;
b = .01 inch;
L = 24 inch;
```

Appoximatly:

```
TorsionSpringConstant= (h b^3 ShearModulus) / (3 L)
```

```
0.0803472 inch pound
```

accounting forlongitudinal shear (I think this may be wong. SHould depned of angle)

$$\text{ShearCorrection} = \frac{\text{ElasticModulus}\, h^4}{\text{ShearModulus}\ 120\, b^2\, L^2}$$

```
0.0226642
```

```
TorsionSpringConstant= (h b^3 ShearModulus) (1 + ShearCorrection) / (
```

```
0.0821682 inch pound
```

According to Mark's, (but I think this is wrong)

$$\text{TorsionSpringConstant} = (b^3\, h^3\, \text{ShearModulus}) / (3.6\, L\, (b^2 + h^2))$$

```
0.0669292 inch pound
```

According to Roak's 6th edition

```
a = h / 2;
```

```
z = b / 2;
```

$$\text{TorsionSpringConstantRoak} = a\, z^3 \left(\frac{16}{3} - 3.36 \left(\frac{z}{a}\right) \left(1 - \frac{z^4}{12\, a^4}\right) \right) \text{ShearModulus} / L + \frac{8}{45}\, \text{ElasticModulus}$$

$$0.0793348 \text{ inch pound} + 0.00182101 \text{ inch pound}\ \theta^2$$

```
TorsionSpringConstantRose =
 (h b^3 ShearModulus) / ((3 + 1.8 b / h) L) + ElasticModulus (h^5 b (θ / L)
```

0.0793945 inch pound + 0.00182101 inch pound θ^2

```
TorsionSpringConstantRose[[2]] / TorsionSpringConstantRose /. θ →
```

0.0535616

$$\left(\frac{2\,\phi}{\pi}\right)^2$$

$$\frac{4\,\phi^2}{\pi^2}$$

$$N\left[\int_0^{\frac{\pi}{2}} \mathrm{Sin}[\phi]\,\left(\frac{2\,\phi}{\pi}\right)^2 d\phi\right]$$

0.46267

■ Stress limits of spring

```
T = TorsionSpringConstantπ / 2
```

0.105132 inch pound

```
TorsionStrength = 60000 pound / inch^2
```

$$\frac{60000\ \text{pound}}{\text{inch}^2}$$

Again according to Mark's

```
safetorque = 2 b^2 h .43 TensileStrength/ 9 /2
```

0.298611 inch pound

According to Roak

$$\text{safetorque} = \text{TorsionStrength}\ 8\,a\,z^2 \Big/ \left(3\left(1 + .06095\,\frac{z}{a}\right)\right)$$

0.998782 inch pound

```
safewieght = h * b * TensileStrength / 4
```

156.25 pound

$$\text{TorsionStress} = \frac{3\,T}{8\,a\,z\text{^}2}\left(1 + .6095\,\frac{z}{a} + .8865\,(z/a)\text{^}2 - 1.8023\,(z/a\right.$$

$\frac{12773.9\ \text{pound}}{\text{inch}^2}$

```
LinearStress = TotalWeight / ( h b)
```

$\frac{16720.\ \text{pound}}{\text{inch}^2}$

$$\text{TotalStress} = \text{PowerExpand}\left[\sqrt{\text{LinearStress}\text{^}2 + \text{TorsionStress}\text{^}2}\right]$$

$\frac{21041.2\ \text{pound}}{\text{inch}^2}$

```
SafetyFactor = 60000 pound / inch^2 / TotalStress
```

2.85155

```
h * b
```

0.005 inch^2

```
.016 * .006 * 60
```

0.00576

■ effect of weight on torque

$$J = 4\int_0^a\int_0^z (x\text{^}2 + y\text{^}2)\,dx\,dy$$

0.000104208 inch^4

Or using Rouke's

$$4\left(\frac{a^3 z}{3}+\frac{a z^3}{3}\right)$$

0.000104208 inch^4

```
ExtraT = J LinearStress θ / L
```

0.0725985 inch pound θ

```
SpringConstant = TorsionSpringConstant + ExtraT / θ
```

0.139528 inch pound

```
CorrectedProtion = TorsionSpringConstant/ SpringConstant
```

0.479684

$$\text{ExtraTRose} = \text{LinearStress}\, h^3\, b\, \theta\, /\, (12\, L)$$

0.0725694 inch pound θ

■ Rate

```
SpringConstant
```

0.139528 inch pound

```
inertia
```

13.9 inch pound sec^2

```
sln = DSolve[ -K θ[t] == KI θ''[t] , θ[t], t] /. Null → 1
```

Power::indet : Indeterminate expression 0^0 encountered .

$$\left\{\left\{\theta[t] \to C[2]\,\text{Cos}\left[\frac{\sqrt{K}\,t}{\sqrt{KI}}\right] + C[1]\,\text{Sin}\left[\frac{\sqrt{K}\,t}{\sqrt{KI}}\right]\right\}\right\}$$

```
θ[t] /. sln /. C[1] → 1 /. C[2] → 0
```

$$\left\{\text{Sin}\left[\frac{\sqrt{K}\ t}{\sqrt{KI}}\right]\right\}$$

$$\text{period} = \text{PowerExpand}\left[2\,\pi\sqrt{\frac{\text{inertia}}{\text{SpringConstant}}}\right]$$

62.7129 sec

$$\text{peakTorque} = \pi\ \text{SpringConstant}$$

0.438339 inch pound

$$\text{OZINCHES} = \text{peakTorque} * 12 * 16\ \text{oz} / \text{pound}$$

84.1611 inch oz

inertia

13.9 inch pound sec^2

■ measured results

MeasuredPeriod = 41.987544 sec

41.9875 sec

MeasuredPeriodDisk = 19.948 sec

19.948 sec

MeasuredPeriodWBolts = 20.298424 sec

20.2984 sec

```
Ratio1 = period / MeasuredPeriod
```

1.49361

```
Ratio2 = periodDisk / MeasuredPeriodDisk
```

$$\frac{0.0501303\ \text{periodDisk}}{\text{sec}}$$

■ Lift distance

$$\text{Lift} = \left(\frac{\pi\, h}{2}\right)^2 / (2\, L)$$

0.012851 inch

■ Decay Rate

Time for amplitude to decay to 1/2:

```
halflife = 10 hour 3600 second / hour
```

36000 second

```
cycles = halflife / period
```

$$\frac{574.044\ \text{second}}{\text{sec}}$$

$$\text{pendenergy} = \int_0^{\pi} \text{SpringConstant}\,\theta\, d\theta$$

0.688542 inch pound

```
LossPerCycle = (pendenergy / 2) / cycles 16 oz / pound
```

$$\frac{0.00959566\ \text{inch oz sec}}{\text{second}}$$

```
LossPerTick = 15 * LossPerSwing
```

15 LossPerSwing

$$\text{LossPerDay} = \frac{\frac{3}{4}\,\text{SpringConstant}\,\pi}{\text{halflife}}\left(24\,\frac{\text{hour}}{\text{day}}\right)\left(3600\,\frac{\text{sec}}{\text{hour}}\right)$$

$$\frac{0.789011\ \text{inch pound sec}}{\text{day second}}$$

SpringConstant

0.139528 inch pound

$$\text{EscapmentRotsPerYear} = \frac{\left(360\,\frac{\text{day}}{\text{year}}\,24\,\frac{\text{hour}}{\text{day}}\,3600\,\frac{\text{sec}}{\text{hour}}\right)}{15\,\frac{\text{cycle}}{\text{rot}}\,30\,\frac{\text{sec}}{\text{cycle}}}$$

$$\frac{69120\ \text{rot}}{\text{year}}$$

BallScrewRotsPerYEar = EscapmentRotsPerYear / (128 * 9)

$$\frac{60\ \text{rot}}{\text{year}}$$

128 * 9

1152

60 / 7.5

8.

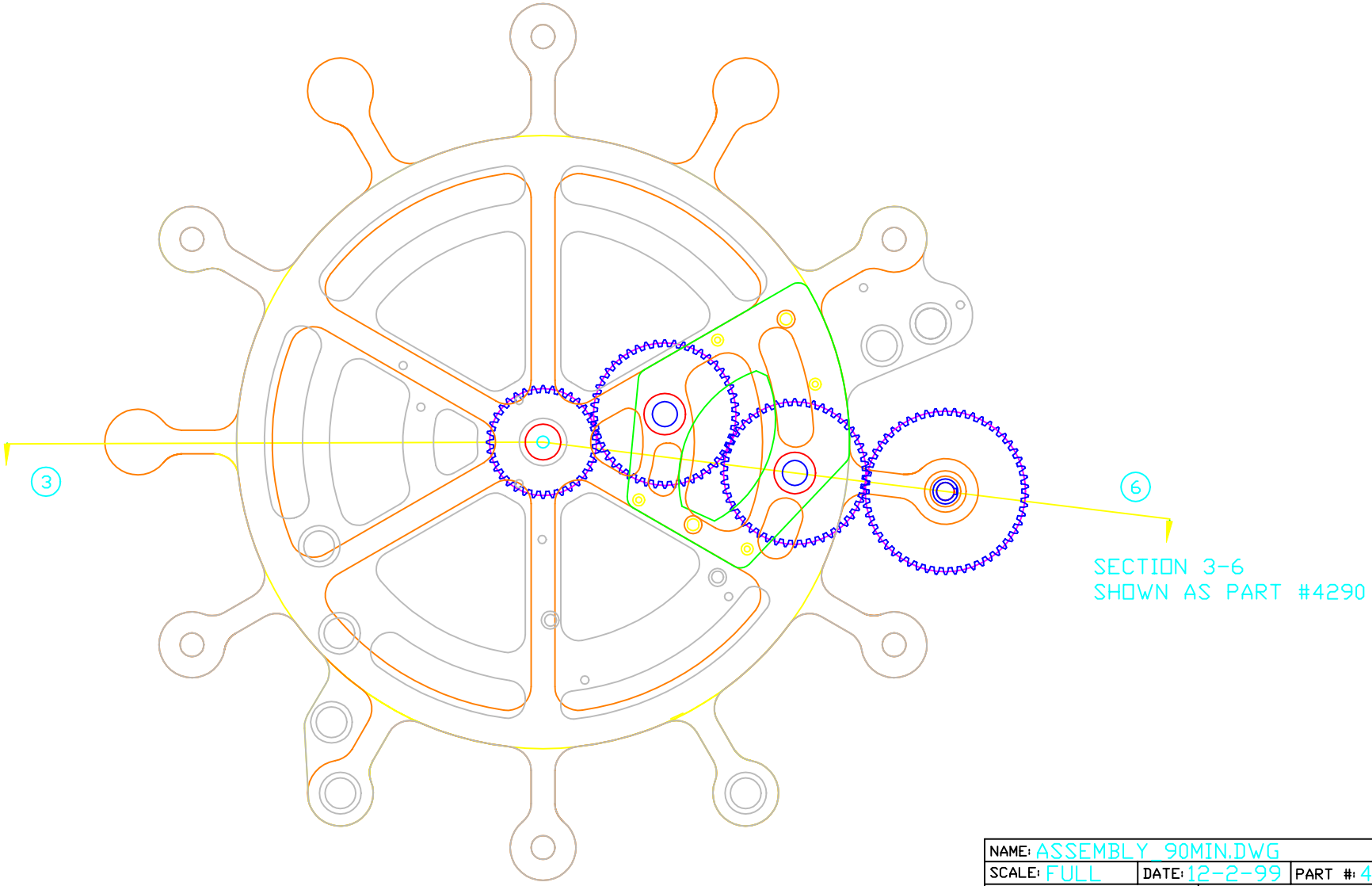

NAME: ASSEMBLY_90MIN.DWG		
SCALE: FULL	DATE: 12-2-99	PART #: 4040.2
SHEET SIZE: D	REV.: 2	
DRAWN BY: EAW		
TOLERANCE:	UNLESS OTHERWISE SPECIFIED	
TOLERANCE HELD AFTER PLATING	ALL DIMENSIONS ARE IN INCHES	
MATL.:	QTY.:	
FINISH:	SHEET 1 OF 1	

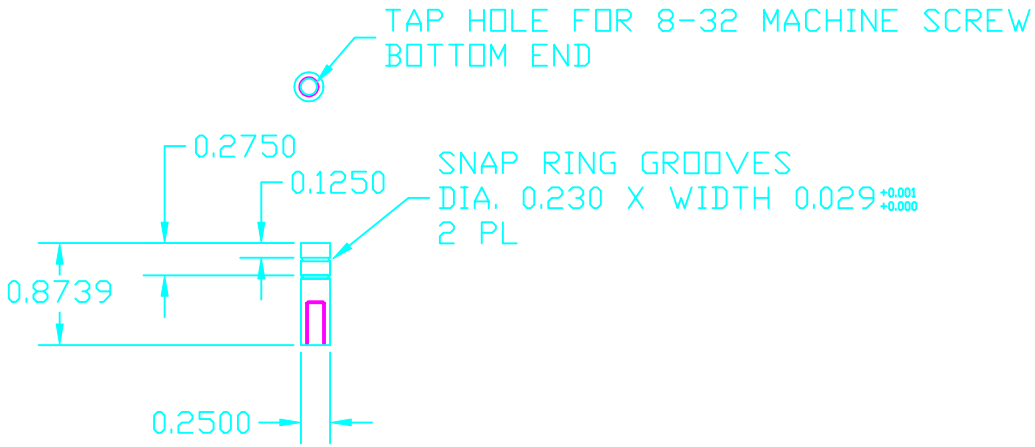

NAME: CAM_MOUNT_2.DWG		
SCALE: FULL	DATE: 9-22-99	PART #: 4355.1
SHEET SIZE: B	REV.: 1	
DRAWN BY: EAW		
TOLERANCE: ±0.001	UNLESS OTHERWISE SPECIFIED	
TOLERANCE HELD AFTER PLATING	ALL DIMENSIONS ARE IN INCHES	
MATL.: STAINLESS STEEL	QTY.: 8	
FINISH:		SHEET 1 OF 1

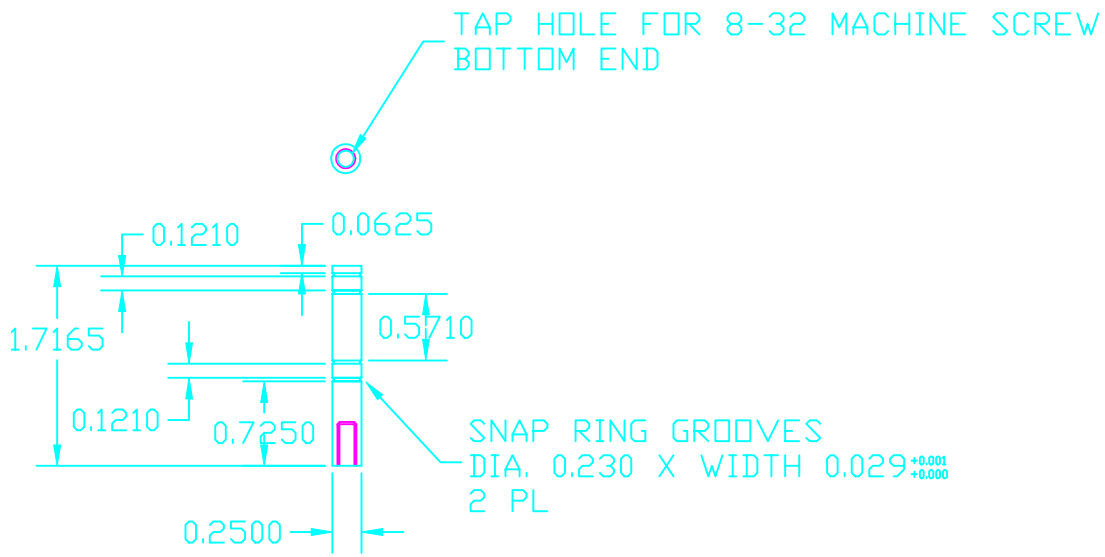

NAME: CAM_MOUNT_1.DWG		
SCALE: FULL	DATE: 9-22-99	PART #: 4354.1
SHEET SIZE: B	REV.: 1	
DRAWN BY: EAW		
TOLERANCE: ±0.001	UNLESS OTHERWISE SPECIFIED	
TOLERANCE HELD AFTER PLATING	ALL DIMENSIONS ARE IN INCHES	
MATL.: STAINLESS STEEL	QTY.: 8	
FINISH:		SHEET 1 OF 1

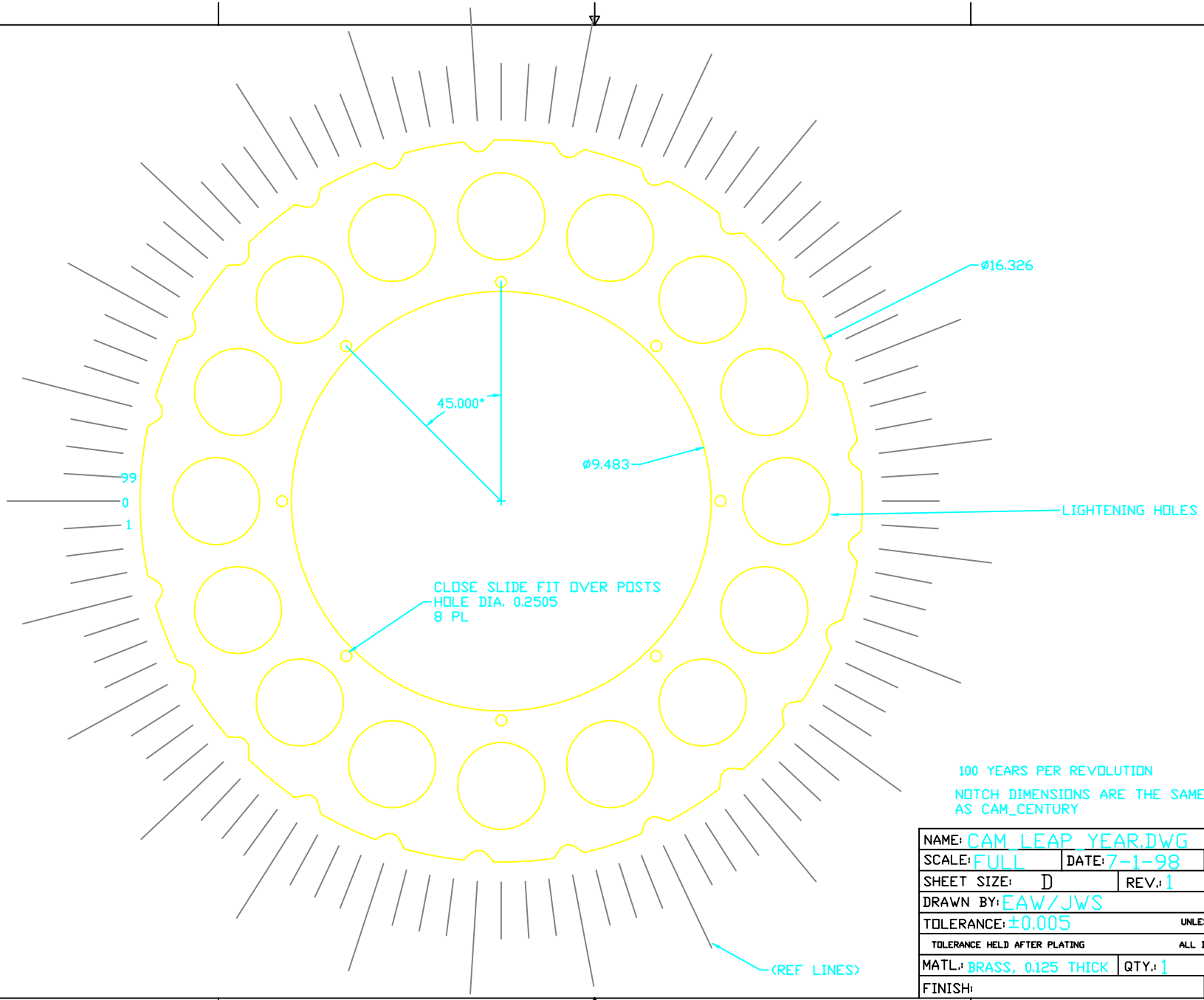

100 YEARS PER REVOLUTION

NOTCH DIMENSIONS ARE THE SAME AS CAM_CENTURY

NAME: CAM_LEAP_YEAR.DWG		
SCALE: FULL	DATE: 7-1-98	PART #: 4336.1
SHEET SIZE: D	REV.: 1	
DRAWN BY: EAW/JWS		
TOLERANCE: ±0.005	UNLESS OTHERWISE SPECIFIED	
TOLERANCE HELD AFTER PLATING	ALL DIMENSIONS ARE IN INCHES	
MATL.: BRASS, 0.125 THICK	QTY.: 1	
FINISH:	SHEET 1 OF 1	

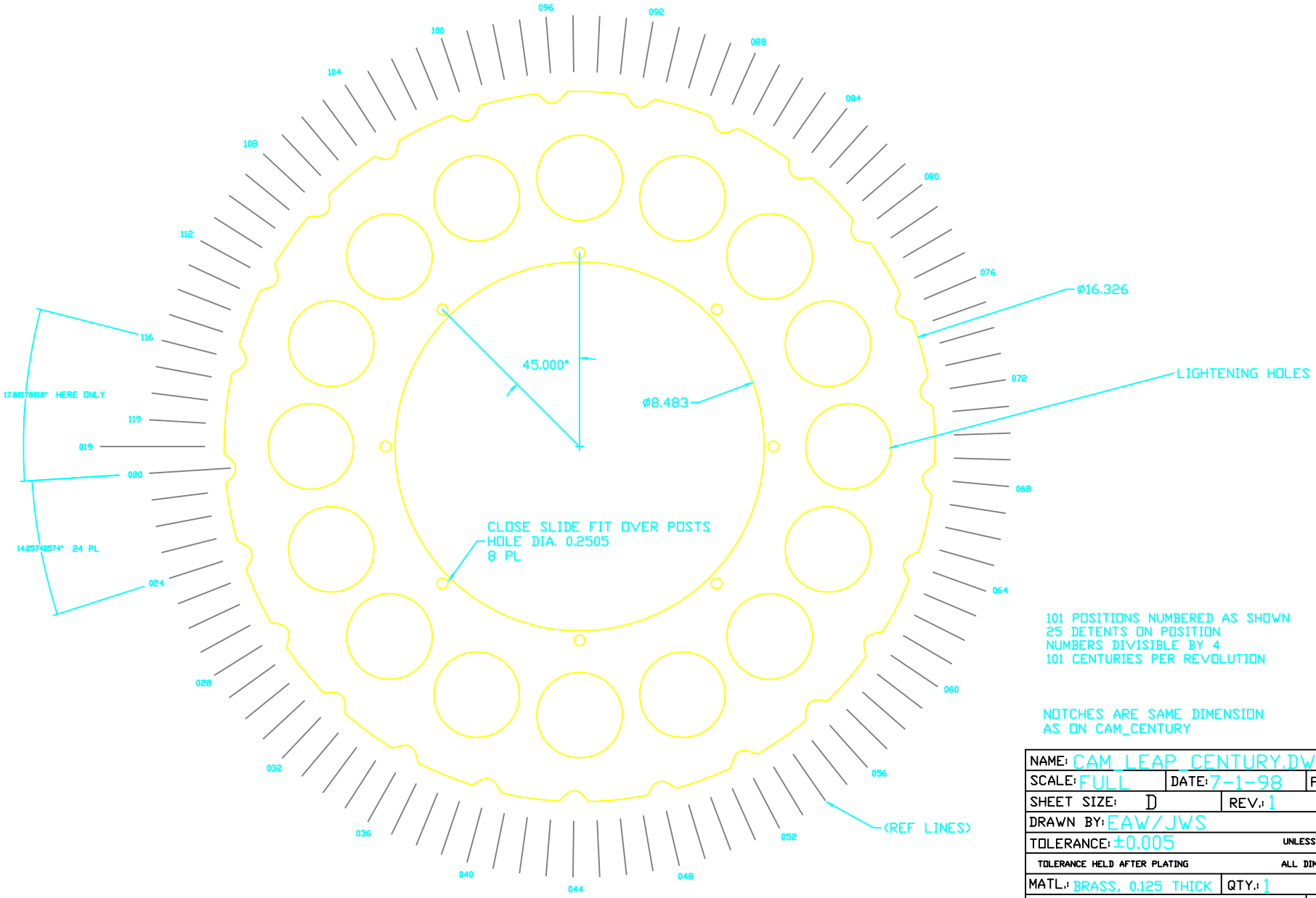

101 POSITIONS NUMBERED AS SHOWN
25 DETENTS ON POSITION
NUMBERS DIVISIBLE BY 4
101 CENTURIES PER REVOLUTION

NOTCHES ARE SAME DIMENSION
AS ON CAM_CENTURY

NAME: CAM_LEAP_CENTURY.DWG		
SCALE: FULL	DATE: 7-1-98	PART #: 4322.1
SHEET SIZE: D	REV.: 1	
DRAWN BY: EAW/JWS		
TOLERANCE: ±0.005	UNLESS OTHERWISE SPECIFIED	
TOLERANCE HELD AFTER PLATING	ALL DIMENSIONS ARE IN INCHES	
MATL.: BRASS, 0.125 THICK	QTY.: 1	
FINISH:	SHEET 1 OF 1	

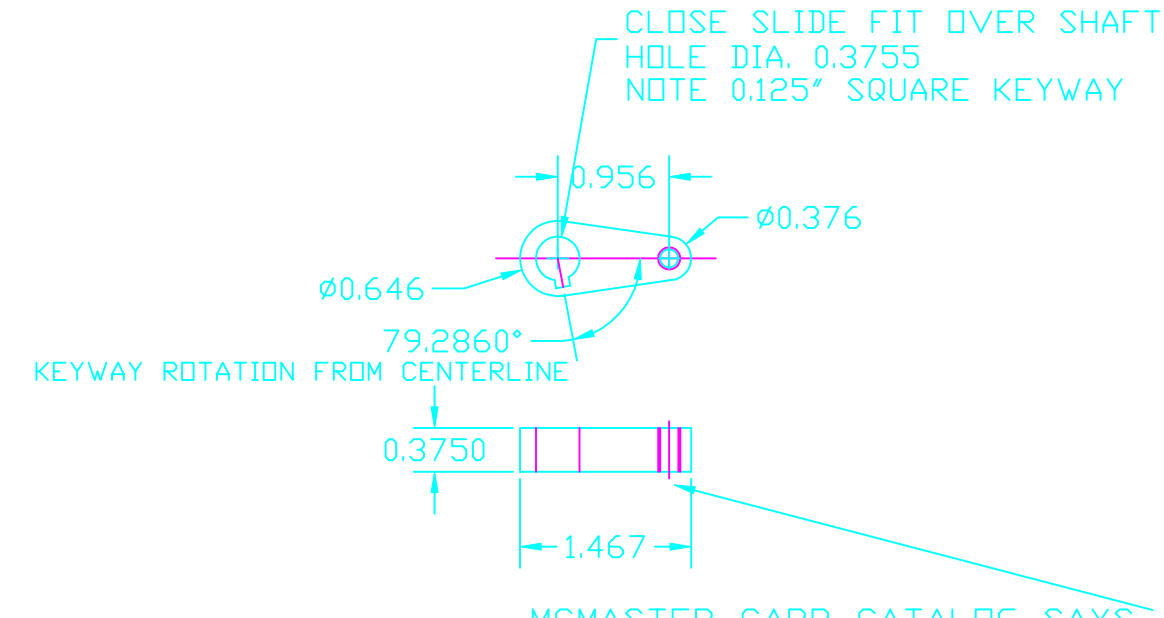

MCMASTER CARR CATALOG SAYS
THIS OUGHT TO BE 10-32 THD FOR THE SHOULDER SCREW
BUT MACHINERY'S H'BOOK SAYS 10-24
PLEASE FIT THE FASTENER AS RECEIVED.

NAME: CAM_FOLLOWER_ARM.DWG		
SCALE: FULL	DATE: 7-13-98	PART #: 4325.1
SHEET SIZE: B	REV.: 1	
DRAWN BY: EAW/JWS		
TOLERANCE: ±0.003	UNLESS OTHERWISE SPECIFIED	
TOLERANCE HELD AFTER PLATING	ALL DIMENSIONS ARE IN INCHES	
MATL.: MONEL/STAINLESS STEEL	QTY.: 3	
FINISH: DEBURR EDGES	SHEET 1 OF 1	

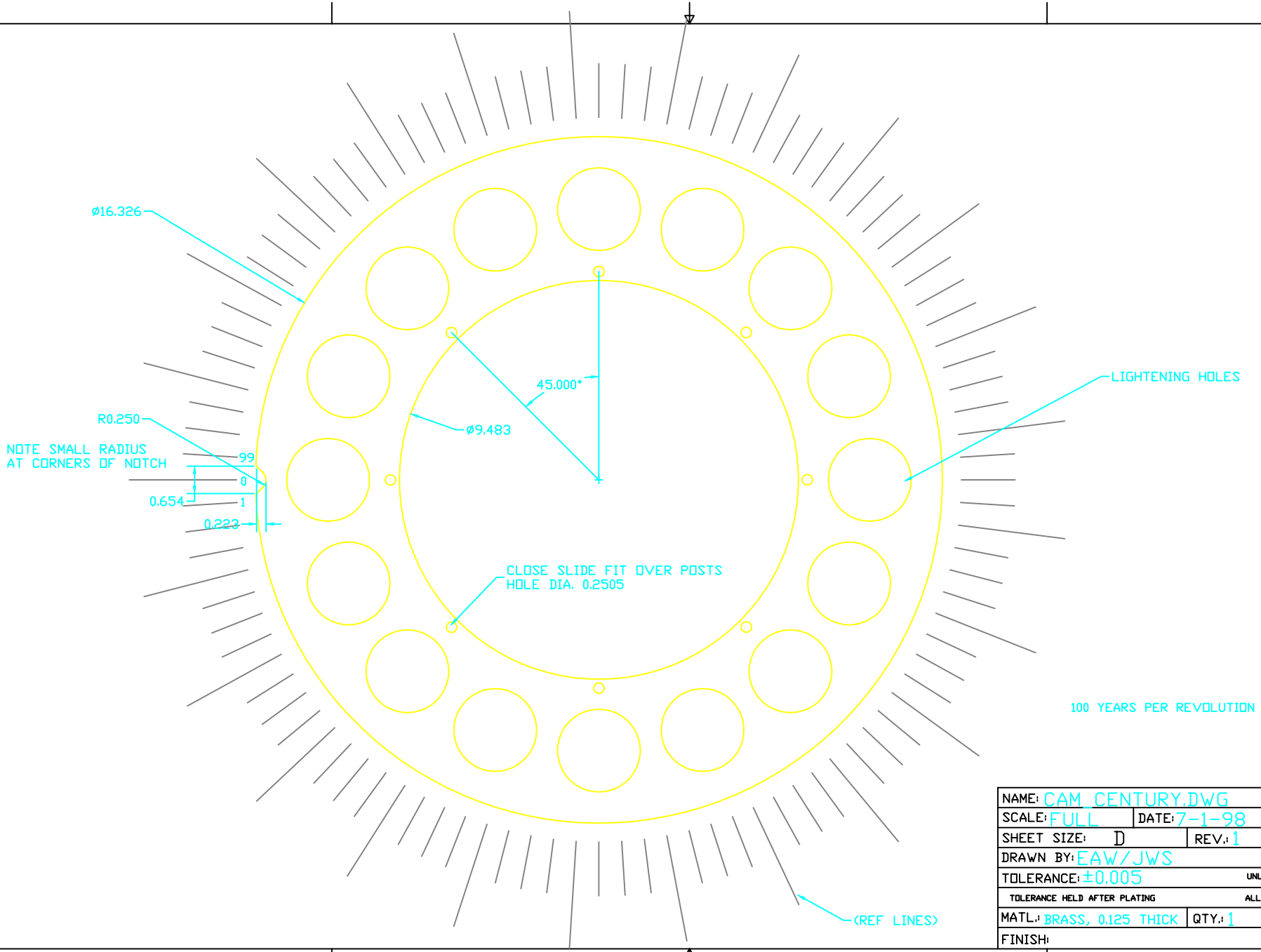

NAME: CAM_CENTURY.DWG		
SCALE: FULL	DATE: 7-1-98	PART #: 4335.1
SHEET SIZE: D	REV.: 1	
DRAWN BY: EAW/JWS		
TOLERANCE: ±0.005	UNLESS OTHERWISE SPECIFIED	
TOLERANCE HELD AFTER PLATING	ALL DIMENSIONS ARE IN INCHES	
MATL.: BRASS, 0.125 THICK	QTY.: 1	
FINISH:	SHEET 1 OF 1	

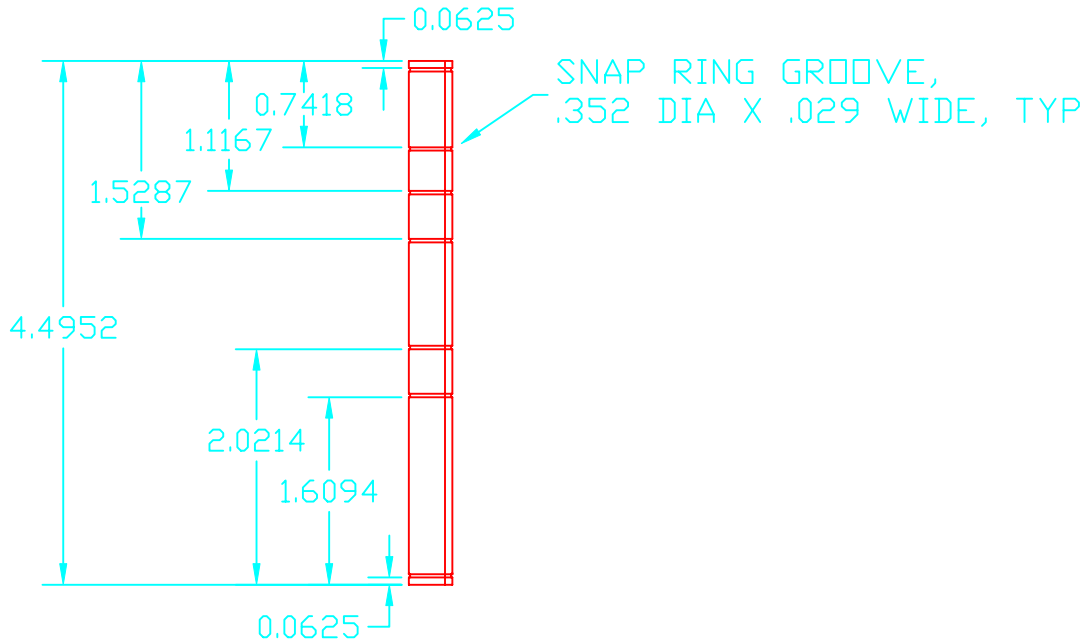

NOTE: DIMENSIONS GIVEN
FROM TOP OF SHAFT
TO TOP OF GROOVES
AND FROM BOTTOM OF SHAFT
TO BOTTOM OF GROOVES

NAME: CAM_AXLE_LPYEAR.DWG		
SCALE: FULL	DATE: 8-3-99	PART #: 4337.3
SHEET SIZE: B	REV.: 3	
DRAWN BY: EAW/JWS		
TOLERANCE: ±0.001	UNLESS OTHERWISE SPECIFIED	
TOLERANCE HELD AFTER PLATING	ALL DIMENSIONS ARE IN INCHES	
MATL.: STAINLESS STEEL BAR COLD FINISHED OR GROUND	QTY.: 1	
FINISH: POLISH PER DANNY HILLIS	SHEET 1 OF 1	

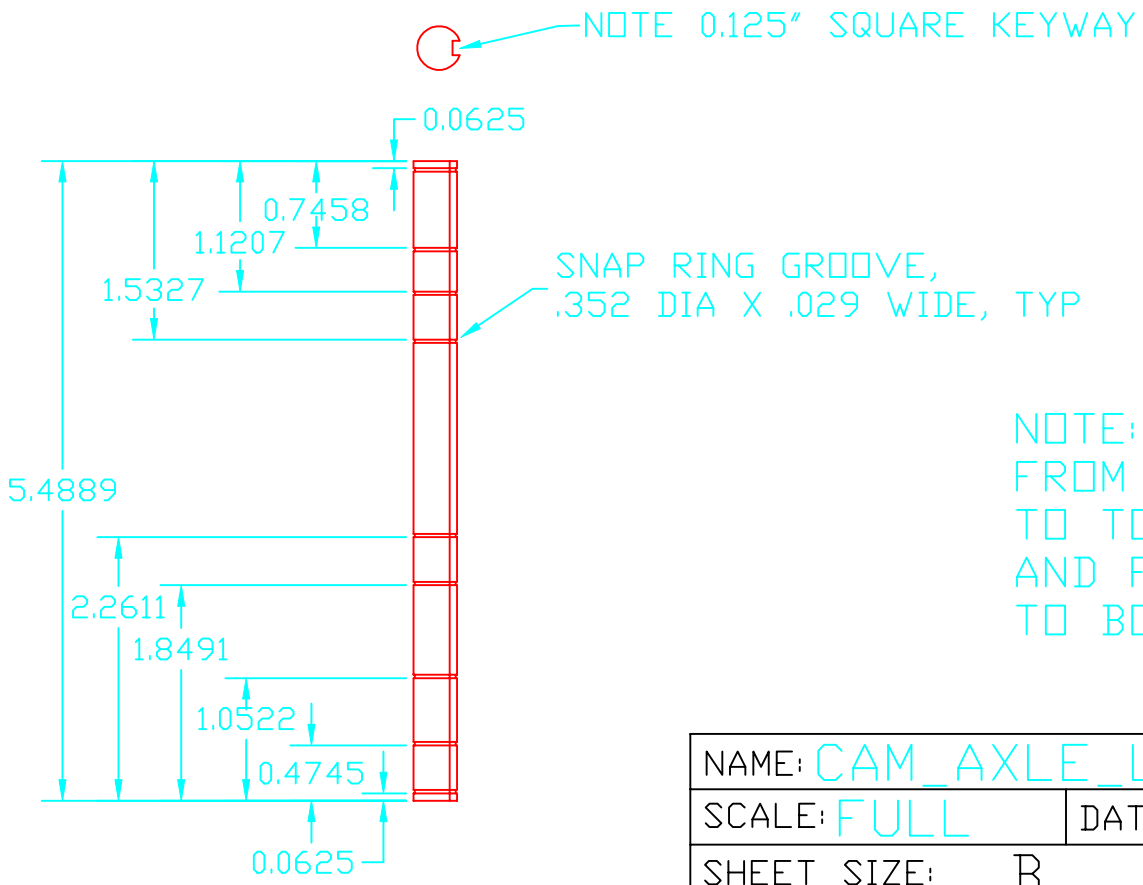

NOTE: DIMENSIONS GIVEN
FROM TOP OF SHAFT
TO TOP OF GROOVES
AND FROM BOTTOM OF SHAFT
TO BOTTOM OF GROOVES

NAME: CAM_AXLE_LPCENTURY.DWG		
SCALE: FULL	DATE: 8-3-99	PART #: 4323.3
SHEET SIZE: B	REV.: 3	
DRAWN BY: EAW/JWS		
TOLERANCE: ±0.001	UNLESS OTHERWISE SPECIFIED	
TOLERANCE HELD AFTER PLATING	ALL DIMENSIONS ARE IN INCHES	
MATL.: STAINLESS STEEL BAR COLD FINISHED OR GROUND	QTY.: 1	
FINISH: POLISH PER DANNY HILLIS	SHEET 1 OF 1	

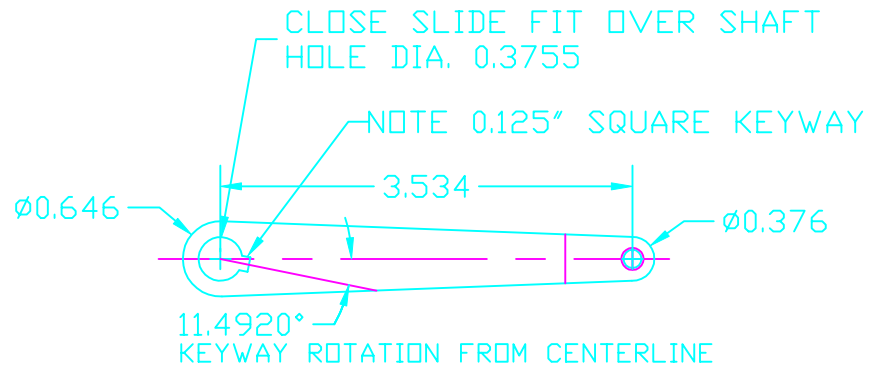

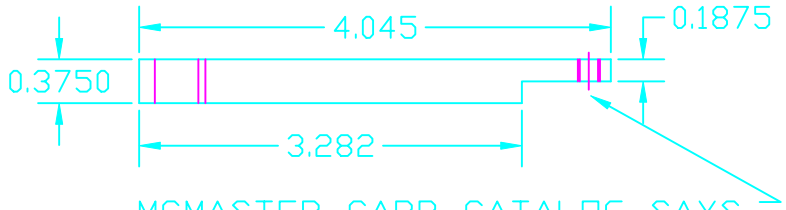

MCMASTER CARR CATALOG SAYS
THIS OUGHT TO BE 10-32 THD FOR THE SHOULDER SCREW
BUT MACHINERY'S H'BOOK SAYS 10-24
PLEASE FIT THE FASTENER AS RECEIVED.

NAME: CAM_ACTUATOR_ARM.DWG		
SCALE: FULL	DATE: 7-13-98	PART #: 4324.1
SHEET SIZE: B	REV.: 1	
DRAWN BY: EAW/JWS		
TOLERANCE: ±0.003	UNLESS OTHERWISE SPECIFIED	
TOLERANCE HELD AFTER PLATING	ALL DIMENSIONS ARE IN INCHES	
MATL.: MONEL/STAINLESS STEEL	QTY.: 2	
FINISH: DEBURR EDGES	SHEET 1 OF 1	

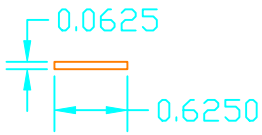

USE MSC PART #67875526
UNBRAKO DOWEL PIN

NAME: BITPIN.DWG		
SCALE: FULL	DATE: 11-9-99	PART #: 4015.2
SHEET SIZE: B	REV.: 2	
DRAWN BY: EAW		
TOLERANCE: AS MANUFACTURED	UNLESS OTHERWISE SPECIFIED	
TOLERANCE HELD AFTER PLATING	ALL DIMENSIONS ARE IN INCHES	
MATL.: STAINLESS STEEL	QTY.: 140	
FINISH: AS MANUFACTURED	SHEET 1 OF 1	

4013.2 BIT PIN LEVER

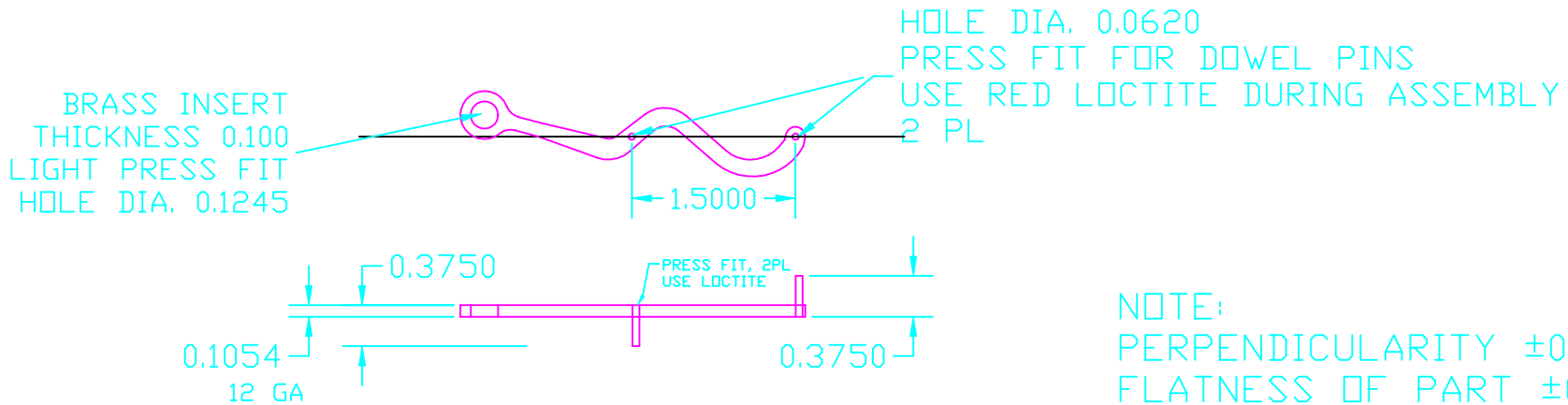

NOTE:
PERPENDICULARITY ±0.005 IN.
FLATNESS OF PART ±0.0005 IN.

4014.1 PIN FOR LEVER

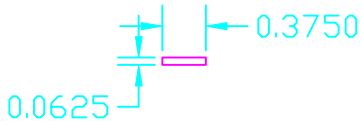

USE UNBRAKO DOWEL PIN #67875443
NEED 2 PER LEVER

BRASS INSERT FOR LEVER

USE 360 BRASS BAR
POLISH BOTH SURFACES

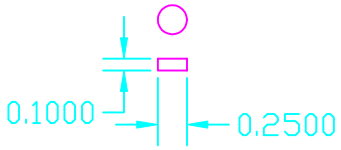

NAME: BITLEVER_BALANCE.DWG		
SCALE: FULL	DATE: 6-14-99	PART #: 4013.2,4014.1
SHEET SIZE: B	REV.: 2	
DRAWN BY: EAW		
TOLERANCE: ±0.003	UNLESS OTHERWISE SPECIFIED	
TOLERANCE HELD AFTER PLATING	ALL DIMENSIONS ARE IN INCHES	
MATL.: 12 GAUGE 304 STAINLESS STEEL	QTY.: 140 LEVERS, 280 PINS	
FINISH: POLISH BOTH SURFACES AND DEBURR EDGES	SHEET 1 OF 1	

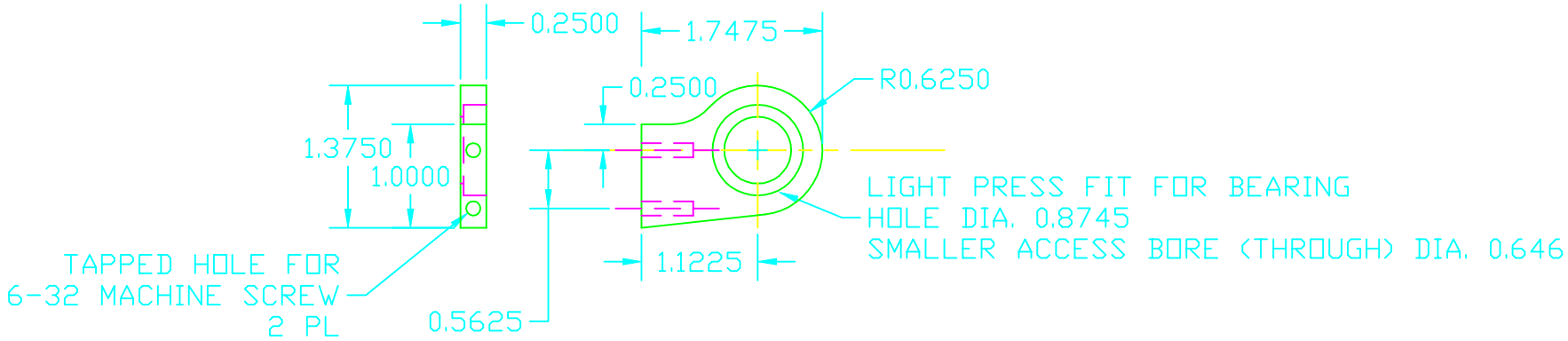

NAME: BEVEL_PLATE_HORIZ2.DWG		
SCALE: FULL	DATE: 7-27-99	PART #: 4413.1
SHEET SIZE: B	REV.: 1	
DRAWN BY: EAW		
TOLERANCE: ±0.005	UNLESS OTHERWISE SPECIFIED	
TOLERANCE HELD AFTER PLATING	ALL DIMENSIONS ARE IN INCHES	
MATL.: MONEL	QTY.: 2	
FINISH:	SHEET 1 OF 1	

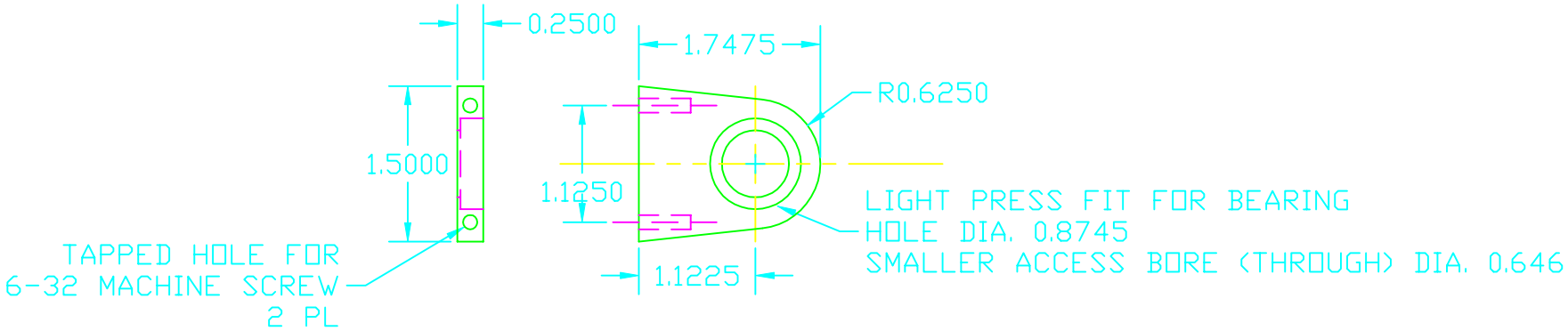

NAME: BEVEL_PLATE_HORIZ.DWG		
SCALE: FULL	DATE: 7-27-99	PART #: 4412.1
SHEET SIZE: B	REV.: 1	
DRAWN BY: EAW		
TOLERANCE: ±0.005	UNLESS OTHERWISE SPECIFIED	
TOLERANCE HELD AFTER PLATING	ALL DIMENSIONS ARE IN INCHES	
MATL.: MONEL	QTY.: 4	
FINISH:		SHEET 1 OF 1

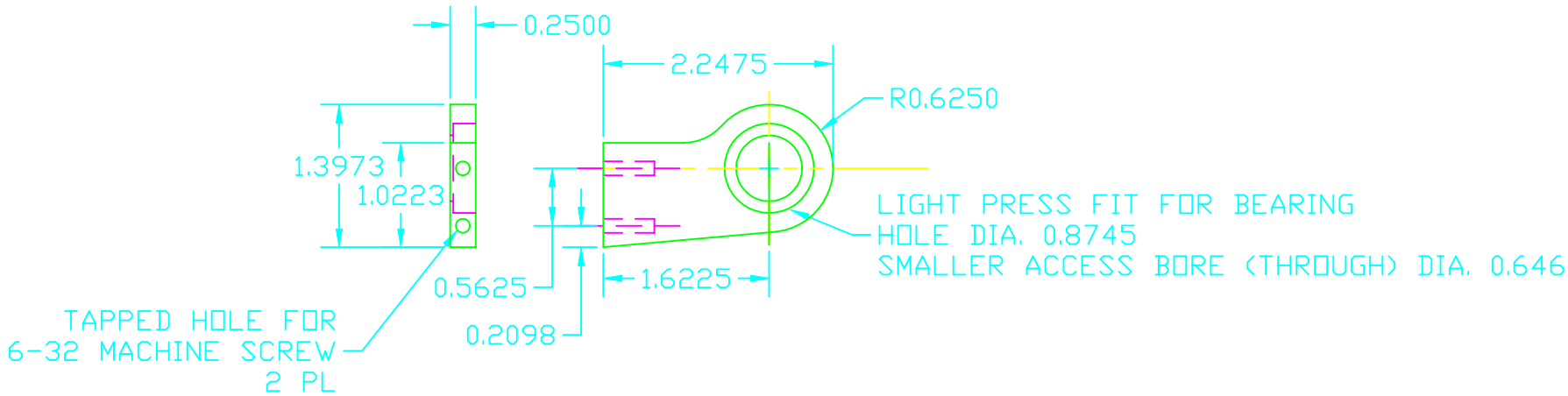

NAME: BEVEL_PLATE_GEAR2.DWG		
SCALE: FULL	DATE: 12-9-99	PART #: 4463.2
SHEET SIZE: B	REV.: 2	
DRAWN BY: EAW		
TOLERANCE: ±0.005	UNLESS OTHERWISE SPECIFIED	
TOLERANCE HELD AFTER PLATING	ALL DIMENSIONS ARE IN INCHES	
MATL.: MONEL	QTY.: 1	
FINISH:	SHEET 1 OF 1	

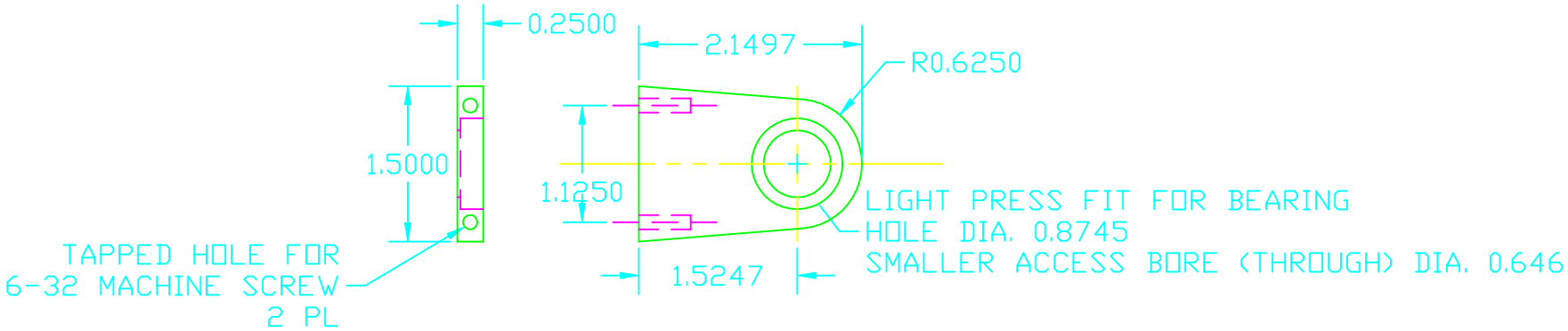

NAME: BEVEL_PLATE_GEAR1.DWG		
SCALE: FULL	DATE: 12-2-99	PART #: 4462.1
SHEET SIZE: B	REV.: 1	
DRAWN BY: EAW		
TOLERANCE: ±0.005	UNLESS OTHERWISE SPECIFIED	
TOLERANCE HELD AFTER PLATING	ALL DIMENSIONS ARE IN INCHES	
MATL.: MONEL	QTY.: 1	
FINISH:		SHEET 1 OF 1

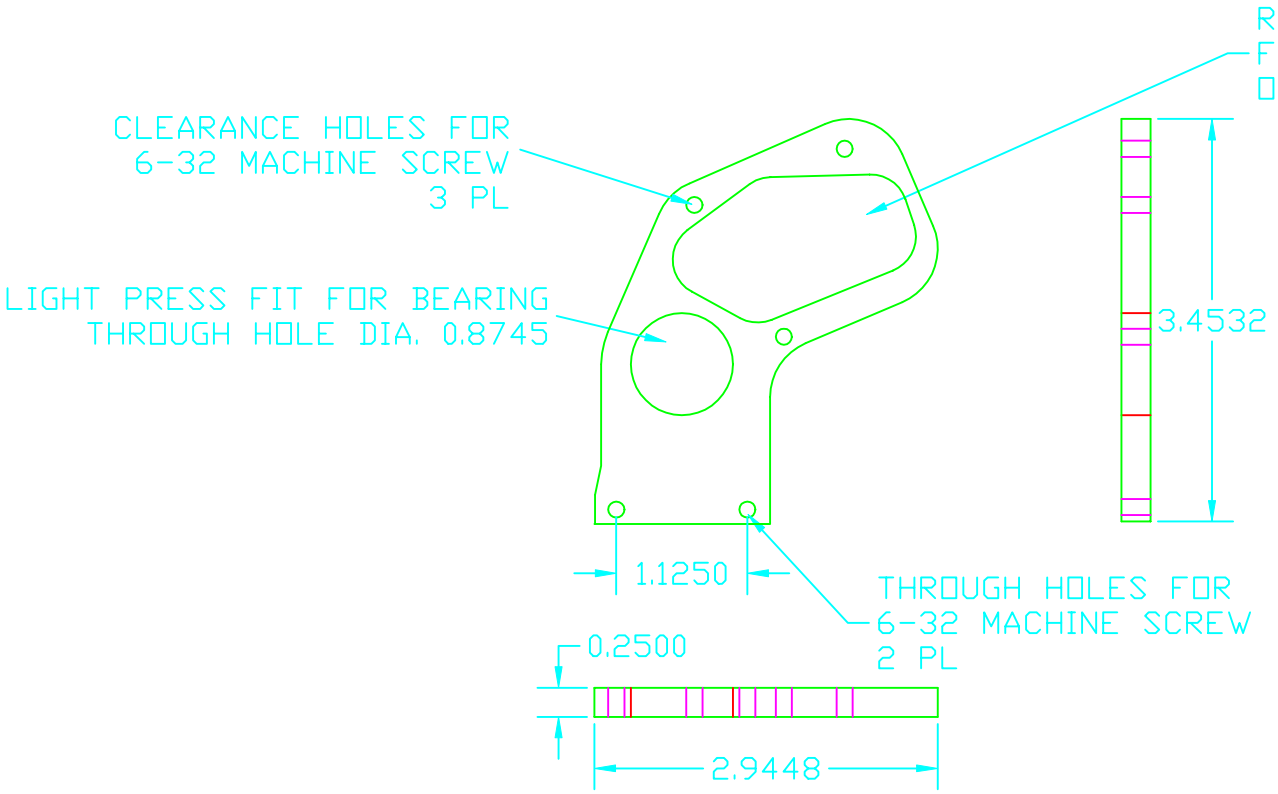

NOTE:
SOME DIMENSIONS OMITTED
DUE TO COMPLEXITY
DRAWING IS TO SCALE

NOTE: USED ON MITER PAIR
FOR GEAR 5

NAME: BEVEL_PLATE_7.DWG		
SCALE: FULL	DATE: 2-15-00	PART #: 4411.3
SHEET SIZE: B	REV.: 3	
DRAWN BY: EAW		
TOLERANCE: ±0.005	UNLESS OTHERWISE SPECIFIED	
TOLERANCE HELD AFTER PLATING	ALL DIMENSIONS ARE IN INCHES	
MATL.: MONEL	QTY.: 1	
FINISH:	SHEET 1 OF 1	

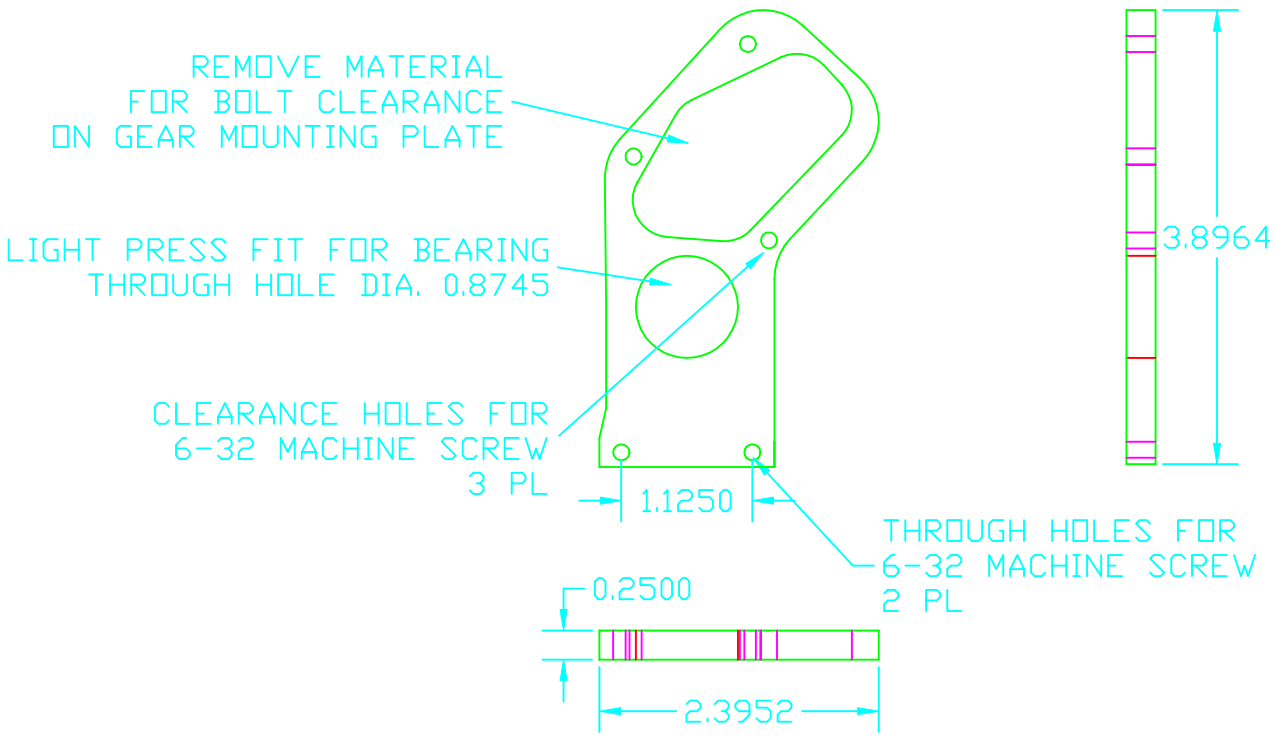

NOTE:
SOME DIMENSIONS OMITTED
DUE TO COMPLEXITY
DRAWING IS TO SCALE

NOTE: USED ON MITER PAIR
FOR GEARS 3 AND 4

NAME: BEVEL_PLATE_6.DWG		
SCALE: FULL	DATE: 2-15-00	PART #: 4409.3
SHEET SIZE: B	REV.: 3	
DRAWN BY: EAW		
TOLERANCE: ±0.005	UNLESS OTHERWISE SPECIFIED	
TOLERANCE HELD AFTER PLATING	ALL DIMENSIONS ARE IN INCHES	
MATL.: MONEL	QTY.: 2	
FINISH:		SHEET 1 OF 1

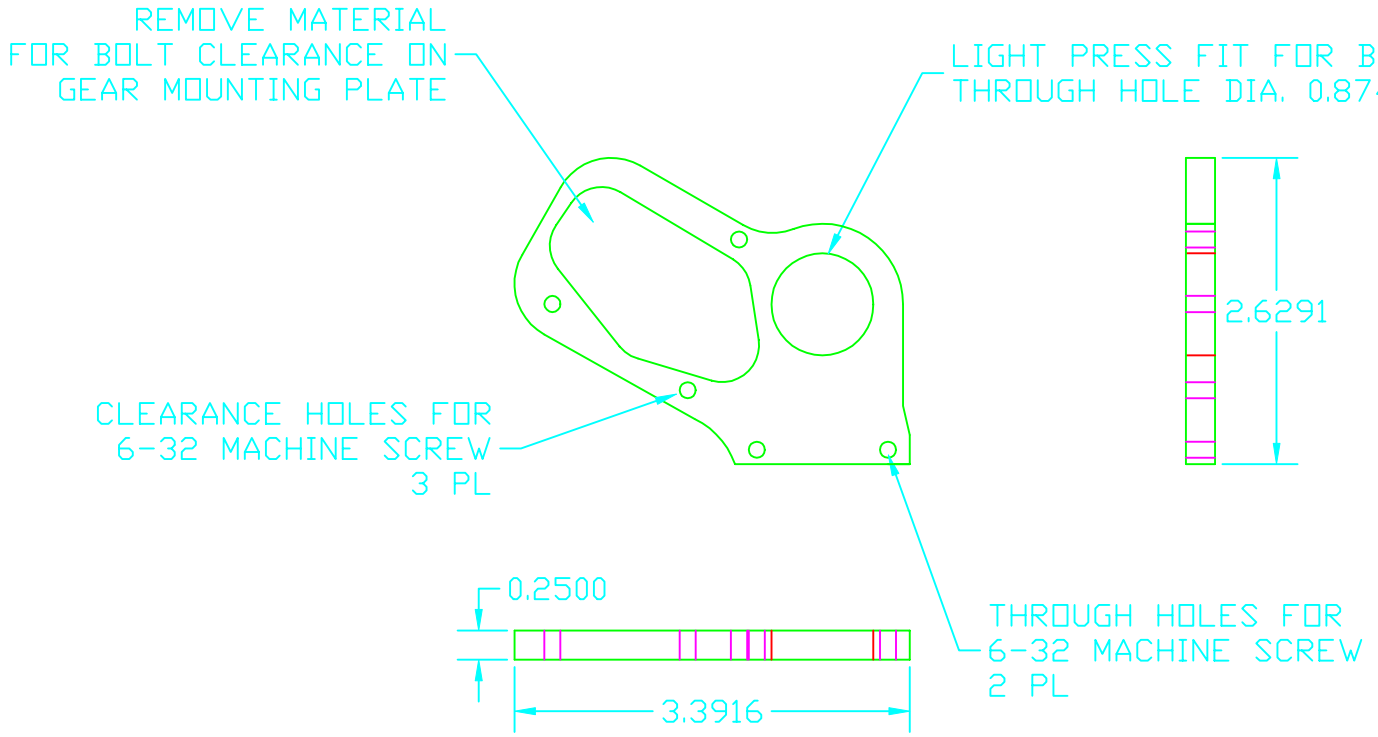

NOTE:
SOME DIMENSIONS OMITTED
DUE TO COMPLEXITY
DRAWING IS TO SCALE

NOTE: USED ON MITER PAIR
FOR GEAR 6

NAME: BEVEL_PLATE_3.DWG		
SCALE: FULL	DATE: 2-15-00	PART #: 4408.3
SHEET SIZE: B	REV.: 3	
DRAWN BY: EAW		
TOLERANCE: ±0.005	UNLESS OTHERWISE SPECIFIED	
TOLERANCE HELD AFTER PLATING	ALL DIMENSIONS ARE IN INCHES	
MATL.: MONEL	QTY.: 1	
FINISH:		SHEET 1 OF 1

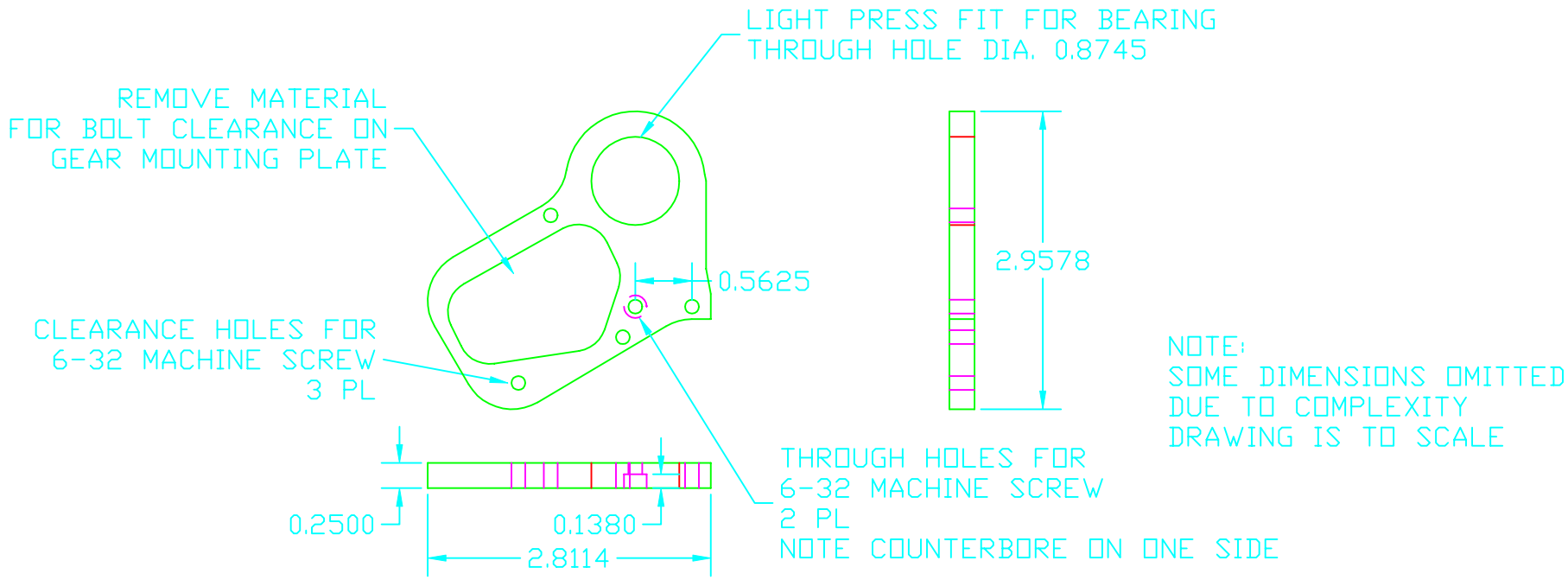

NOTE: USED ON MITER PAIRS
FOR GEARS 2 AND 7

NAME: BEVEL_PLATE_2.DWG		
SCALE: FULL	DATE: 2-15-00	PART #: 4407.3
SHEET SIZE: B	REV.: 3	
DRAWN BY: EAW		
TOLERANCE: ±0.005	UNLESS OTHERWISE SPECIFIED	
TOLERANCE HELD AFTER PLATING	ALL DIMENSIONS ARE IN INCHES	
MATL.: MONEL	QTY.: 2	
FINISH:		SHEET 1 OF 1

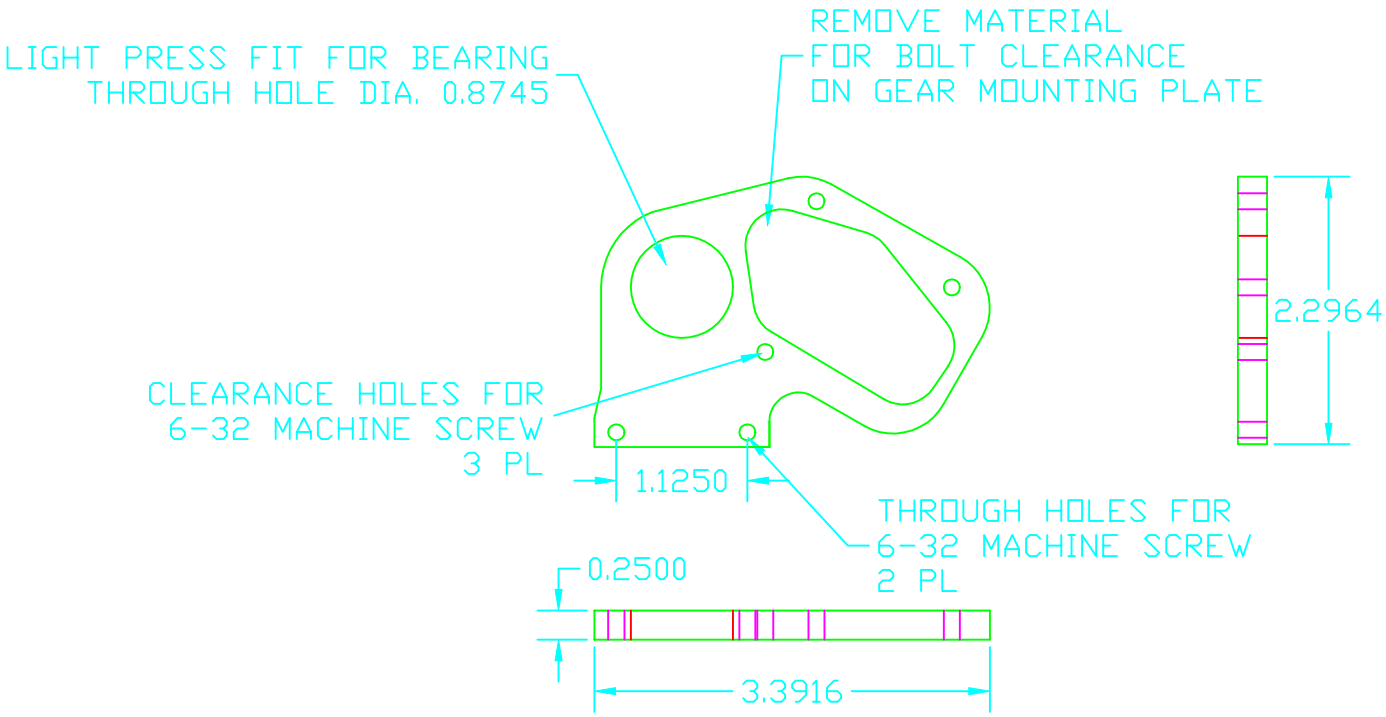

NOTE:
SOME DIMENSIONS OMITTED
DUE TO COMPLEXITY
DRAWING IS TO SCALE

NOTE: USED ON MITER PAIR
FOR GEAR 1

NAME: BEVEL_PLATE_1.DWG		
SCALE: FULL	DATE: 2-14-00	PART #: 4406.3
SHEET SIZE: B	REV.: 3	
DRAWN BY: EAW		
TOLERANCE: ±0.005	UNLESS OTHERWISE SPECIFIED	
TOLERANCE HELD AFTER PLATING	ALL DIMENSIONS ARE IN INCHES	
MATL.: MONEL	QTY.: 1	
FINISH:	SHEET 1 OF 1	

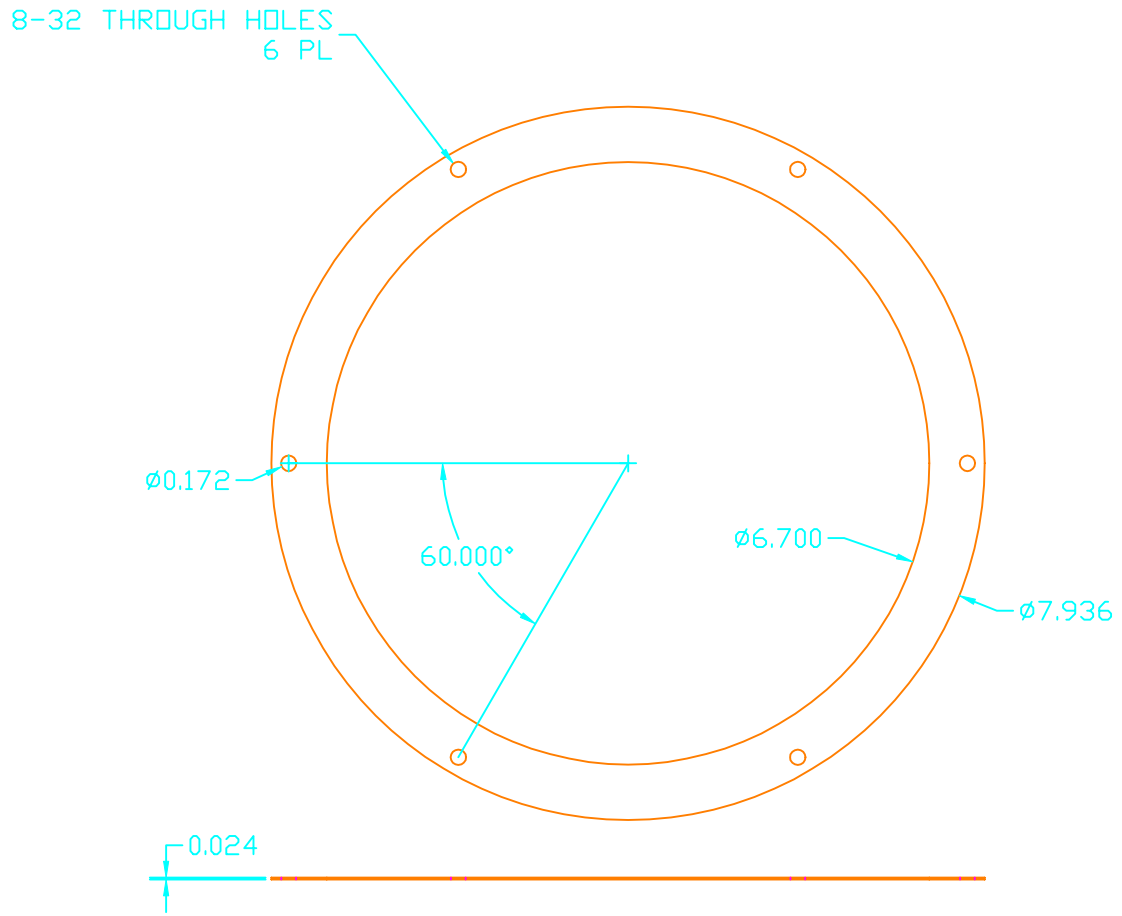

NAME: BEARING_SHIELD_6.DWG		
SCALE: FULL	DATE: 7-1-98	PART #: 4008.1
SHEET SIZE: C	REV.: 1	
DRAWN BY: EAW		
TOLERANCE: ±0.005	UNLESS OTHERWISE SPECIFIED	
TOLERANCE HELD AFTER PLATING	ALL DIMENSIONS ARE IN INCHES	
MATL.: STAINLESS STEEL OR MONEL 0.024" FLAT STOCK	QTY.: 1	
FINISH: DEBURR EDGES		SHEET 1 OF 1

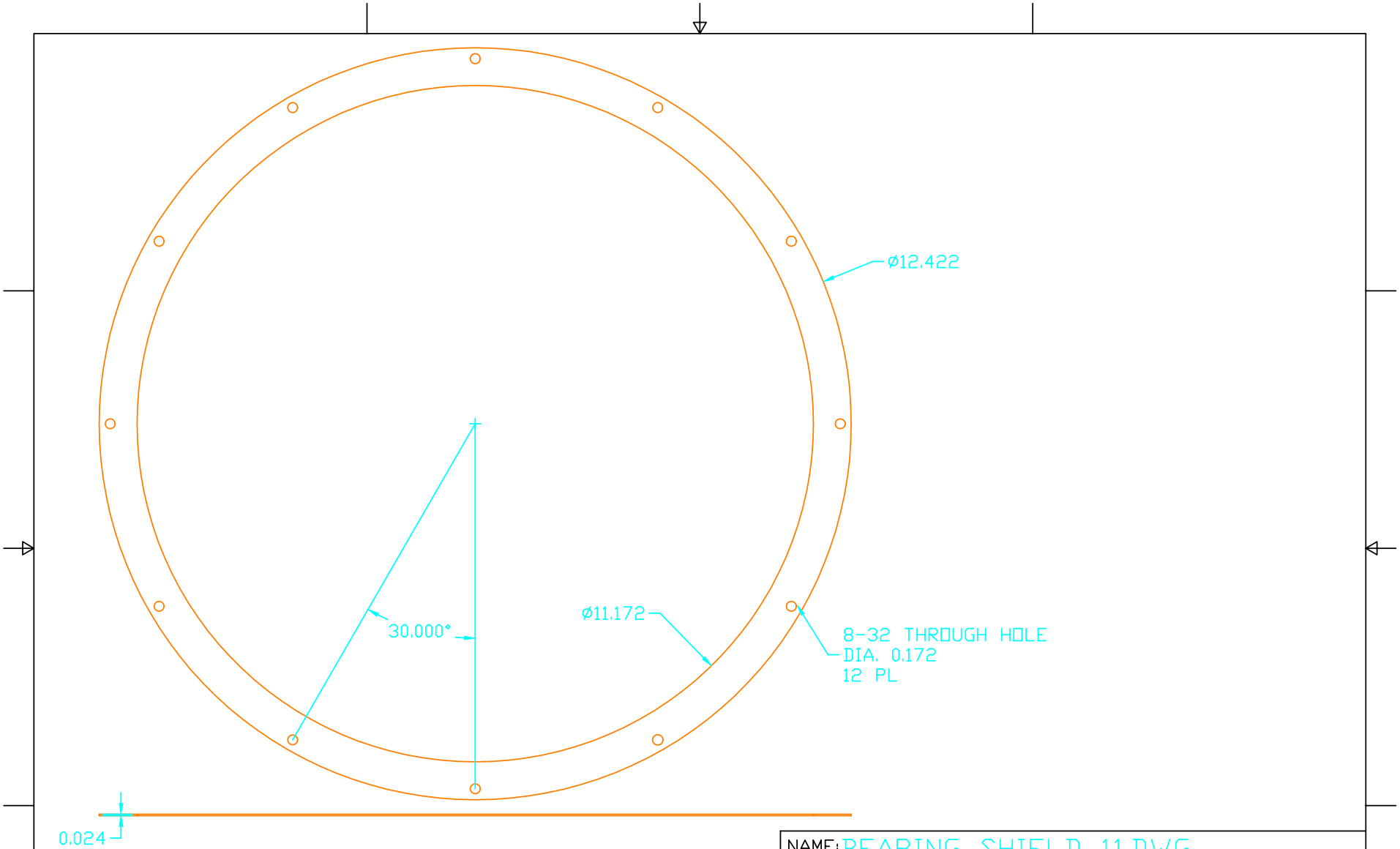

NAME: BEARING SHIELD 11.DWG		
SCALE: FULL	DATE: 8-24-98	PART #: 4291.1
SHEET SIZE: C	REV.: 1	
DRAWN BY: EAW		
TOLERANCE: ±0.003	UNLESS OTHERWISE SPECIFIED	
TOLERANCE HELD AFTER PLATING	ALL DIMENSIONS ARE IN INCHES	
MATL.: STAINLESS STEEL	QTY.: 7	
FINISH: DEBURR EDGES		SHEET 1 OF 1

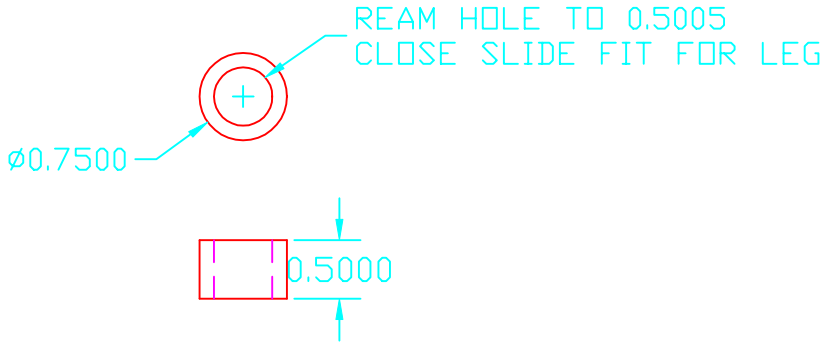

NAME: BAT_LEG_SPACER_2.DWG		
SCALE: FULL	DATE: 8-27-99	PART #: 4285.1
SHEET SIZE: B	REV.: 1	
DRAWN BY: EAW/JWS		
TOLERANCE: ±0.003	UNLESS OTHERWISE SPECIFIED	
TOLERANCE HELD AFTER PLATING	ALL DIMENSIONS ARE IN INCHES	
MATL.: STAINLESS STEEL	QTY.: 2	
FINISH:	SHEET 1 OF 1	

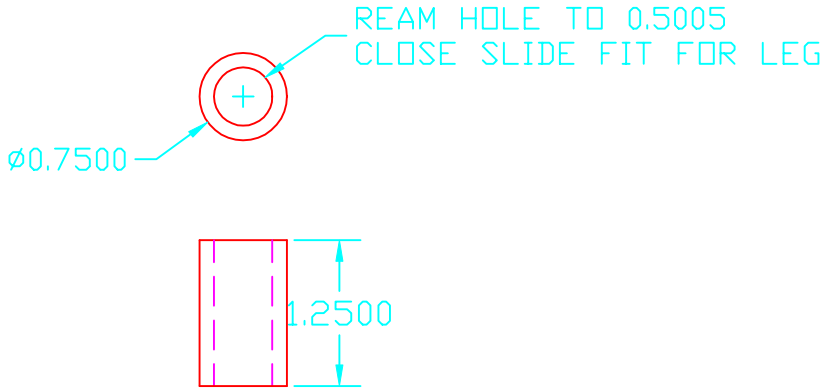

NAME: BAT_LEG_SPACER_1.DWG		
SCALE: FULL	DATE: 8-27-99	PART #: 4275.1
SHEET SIZE: B	REV.: 1	
DRAWN BY: EAW/JWS		
TOLERANCE: ±0.003	UNLESS OTHERWISE SPECIFIED	
TOLERANCE HELD AFTER PLATING	ALL DIMENSIONS ARE IN INCHES	
MATL.: STAINLESS STEEL	QTY.: 2	
FINISH:	SHEET 1 OF 1	

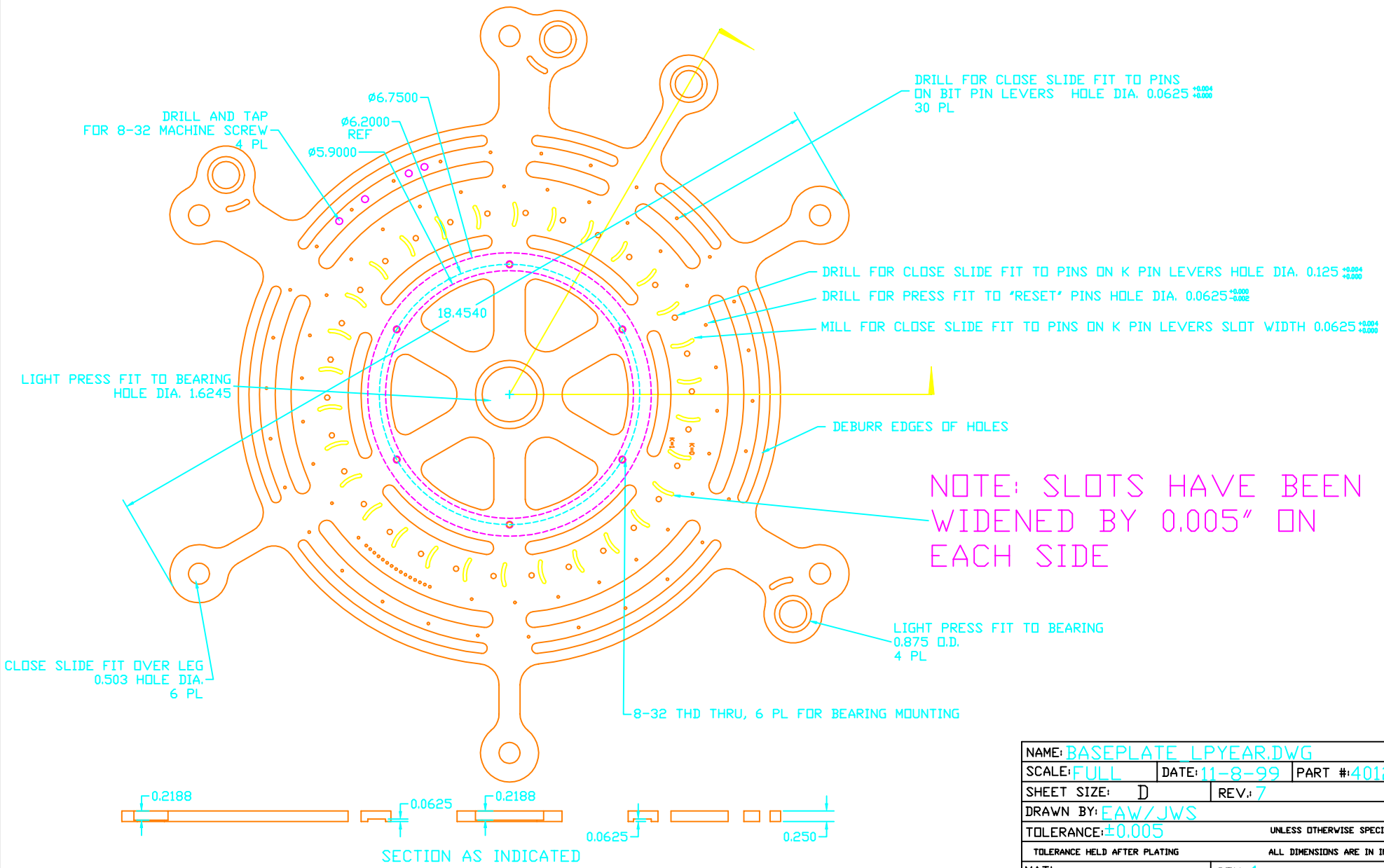

NAME: BASEPLATE_LPYEAR.DWG		
SCALE: FULL	DATE: 11-8-99	PART #: 4012.7
SHEET SIZE: D	REV.: 7	
DRAWN BY: EAW/JWS		
TOLERANCE: ±0.005	UNLESS OTHERWISE SPECIFIED	
TOLERANCE HELD AFTER PLATING	ALL DIMENSIONS ARE IN INCHES	
MATL.: MONEL	QTY.: 1	
FINISH:	SHEET 1 OF 1	

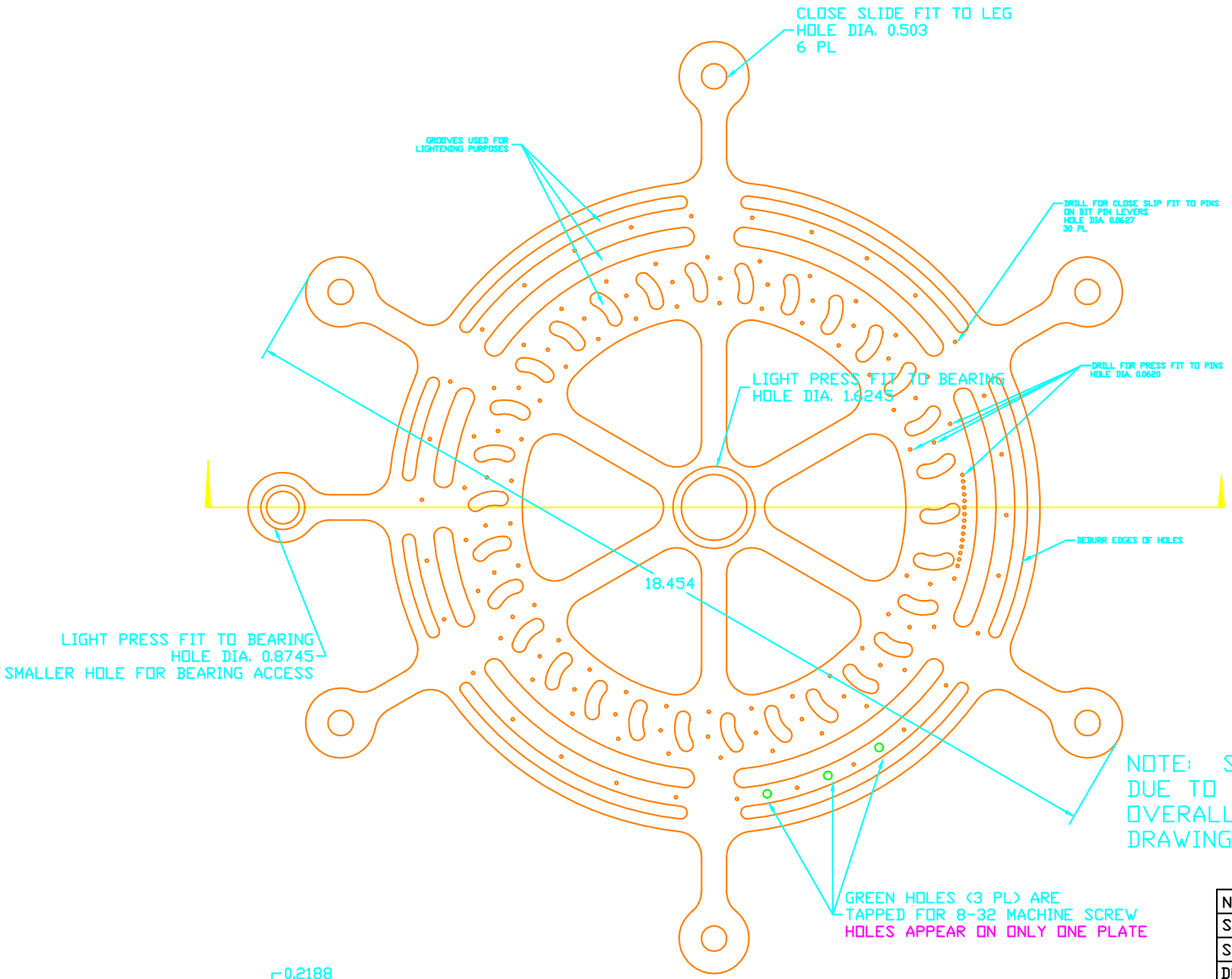

NOTE: SOME DIMENSIONS OMITTED
DUE TO COMPLEXITY OF DRAWING.
OVERALL DIMENSIONS GIVEN AS REFERENCE.
DRAWING IS TO SCALE.

NAME: BASEPLATE.DWG		
SCALE: FULL	DATE: 11-3-99	PART #: 4029.5
SHEET SIZE: D	REV.: 5	
DRAWN BY: EAW/JWS		
TOLERANCE: ±0.005		UNLESS OTHERWISE SPECIFIED
TOLERANCE HELD AFTER PLATING		ALL DIMENSIONS ARE IN INCHES
MATL.: MONEL	QTY.: 4	
FINISH:		SHEET 1 OF 1

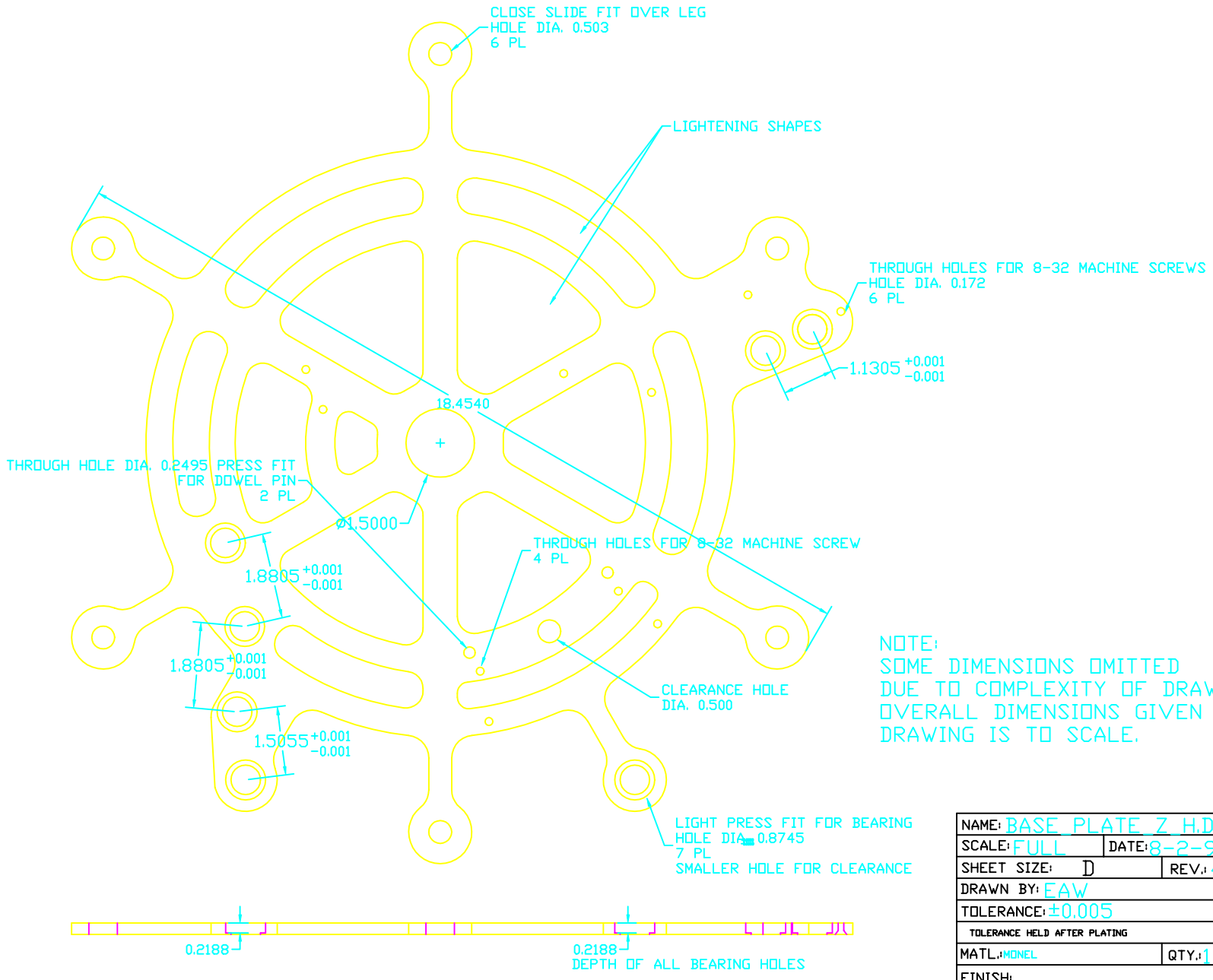

NOTE:
SOME DIMENSIONS OMITTED
DUE TO COMPLEXITY OF DRAWING.
OVERALL DIMENSIONS GIVEN AS REFERENCE.
DRAWING IS TO SCALE.

NAME: BASE_PLATE_Z_H.DWG		
SCALE: FULL	DATE: 8-2-99	PART #: 4251.4
SHEET SIZE: D	REV.: 4	
DRAWN BY: EAW		
TOLERANCE: ±0.005	UNLESS OTHERWISE SPECIFIED	
TOLERANCE HELD AFTER PLATING	ALL DIMENSIONS ARE IN INCHES	
MATL.: MONEL	QTY.: 1	
FINISH:	SHEET 1 OF 1	

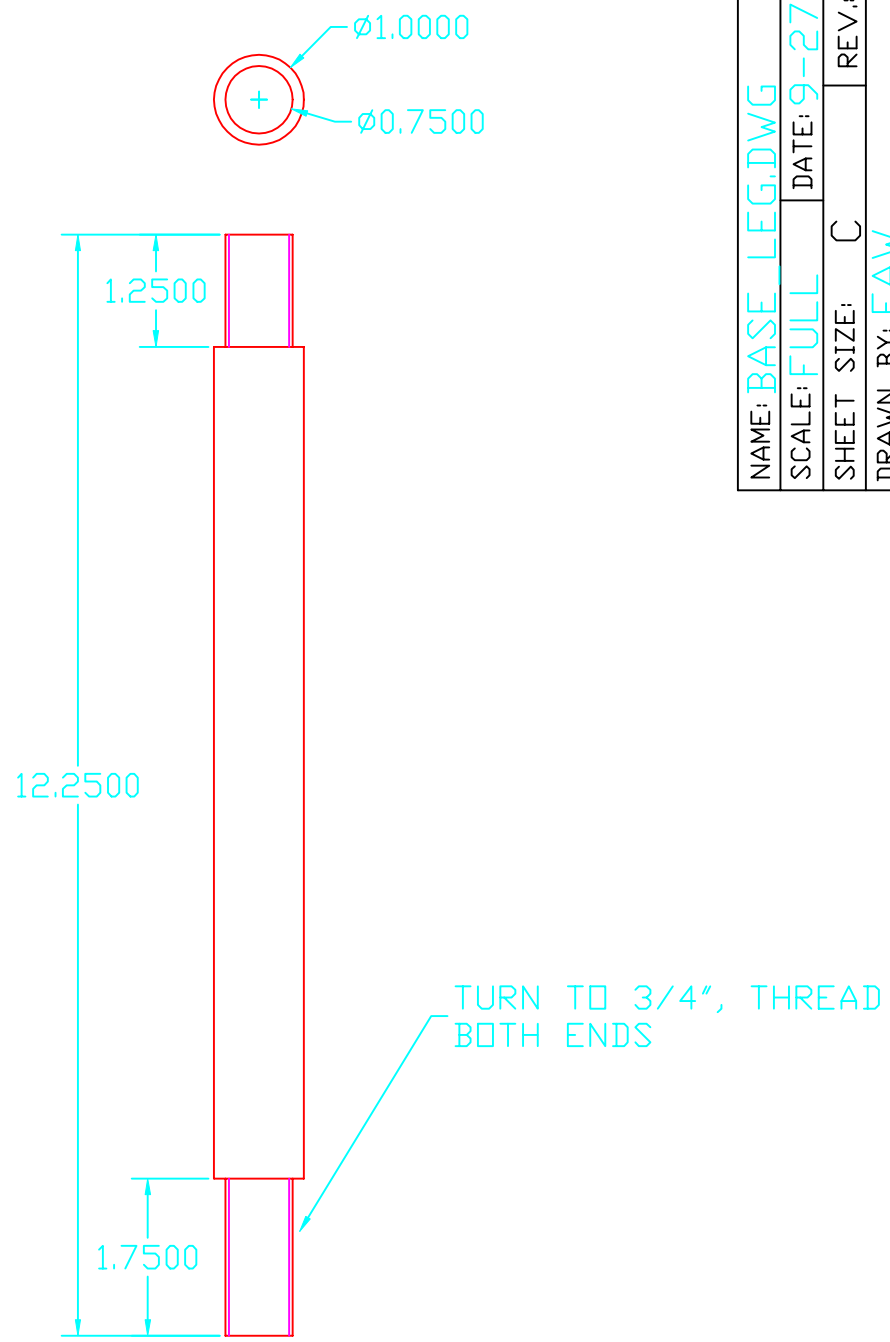

NAME: BASE LEG.DWG			
SCALE: FULL	DATE: 9-27-99	PART #: 4437.1	
SHEET SIZE: C	REV.: 1		
DRAWN BY: EAW			
TOLERANCE: ±0.001	UNLESS OTHERWISE SPECIFIED		
TOLERANCE HELD AFTER PLATING	ALL DIMENSIONS ARE IN INCHES		
MATL.: STAINLESS STEEL BAR COLD FINISHED OR GROUND	QTY.: 6		
FINISH:	SHEET 1 OF 1		

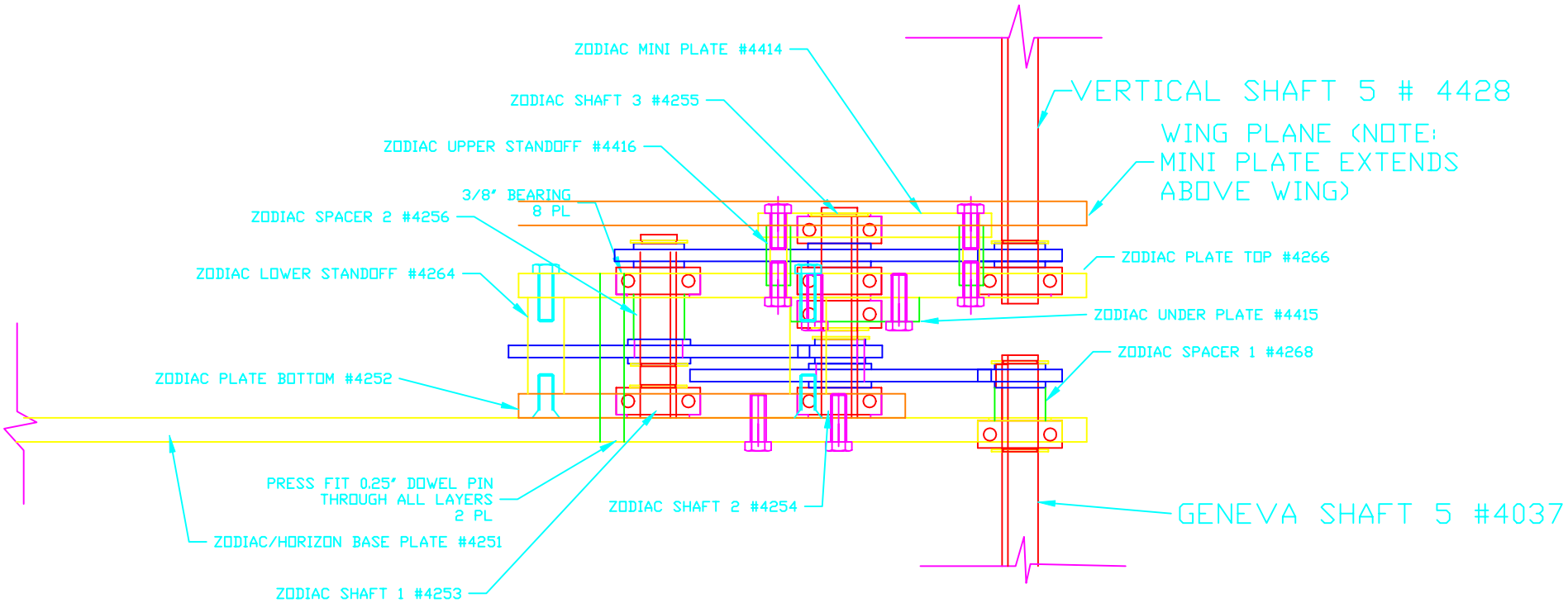

NAME: ASSEMBLY_ZODIAC_SUB.DWG		
SCALE: FULL	DATE: 9-29-99	PART #: 4260.3
SHEET SIZE: B	REV.: 3	
DRAWN BY: EAW		
TOLERANCE:	UNLESS OTHERWISE SPECIFIED	
TOLERANCE HELD AFTER PLATING	ALL DIMENSIONS ARE IN INCHES	
MATL.:	QTY.:	
FINISH:	SHEET 1 OF 1	

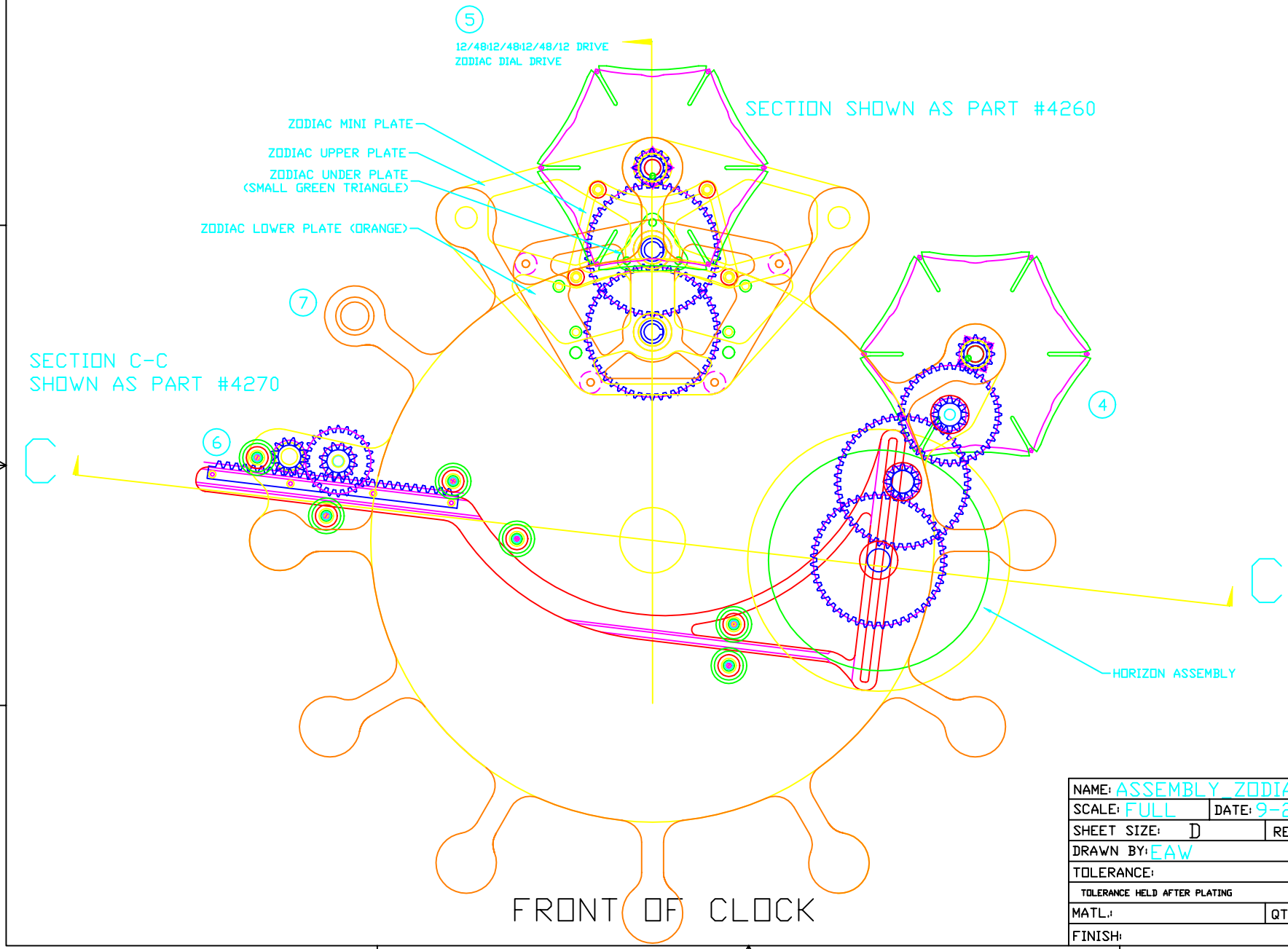

NAME: ASSEMBLY_ZODIAC.DWG		
SCALE: FULL	DATE: 9-29-99	PART #: 4250.3
SHEET SIZE: D	REV.: 3	
DRAWN BY: EAW		
TOLERANCE:	UNLESS OTHERWISE SPECIFIED	
TOLERANCE HELD AFTER PLATING	ALL DIMENSIONS ARE IN INCHES	
MATL.:	QTY.:	
FINISH:	SHEET 1 OF 1	

All shafts 0.375″ diameter

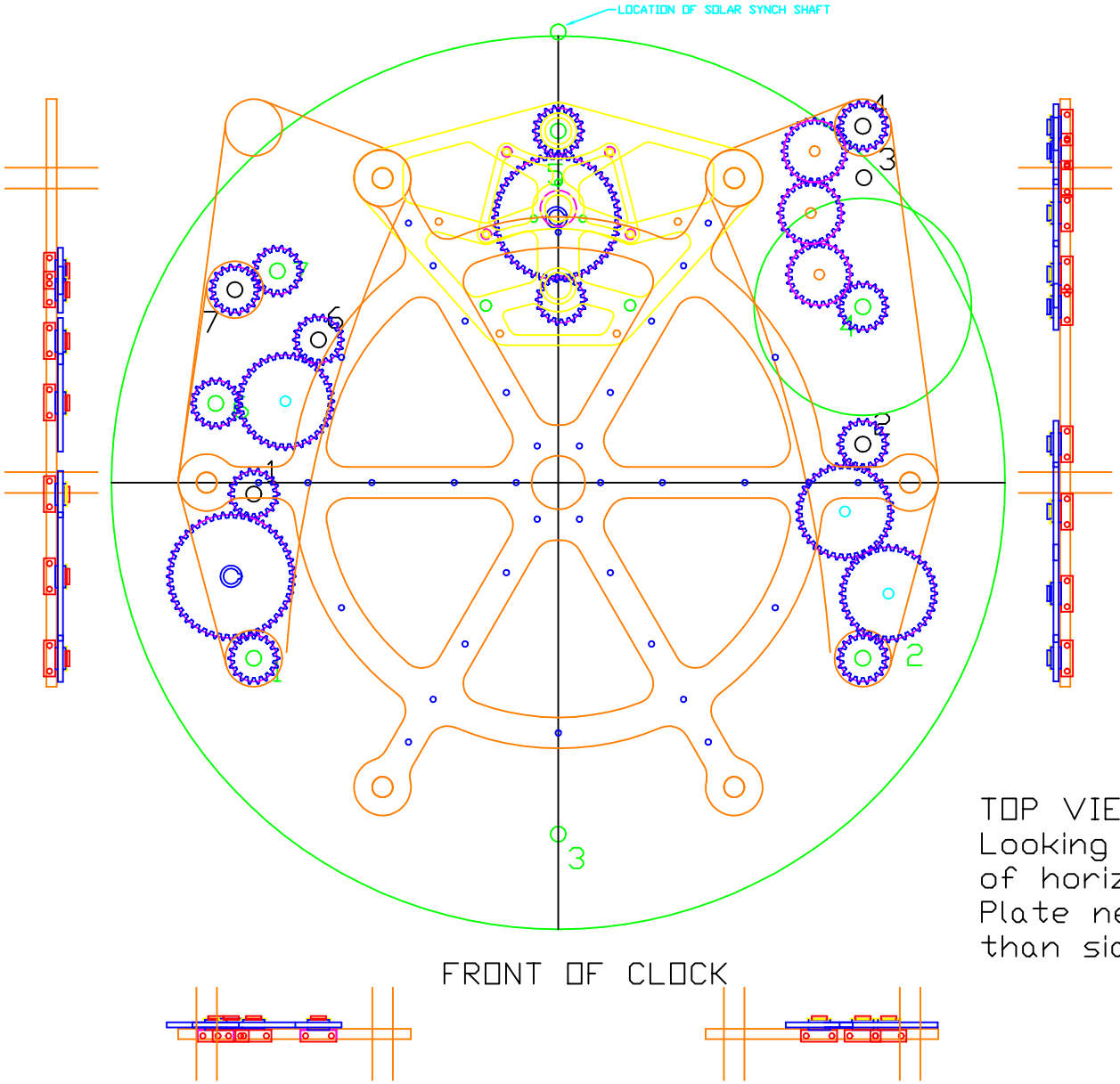

Lower - green
Upper - white
Support - orange

TOP VIEW
Looking down on top layer
of horizontal adder portion
Plate near the top is 0.5″ lower
than side plates ("wings")

FRONT OF CLOCK

NAME: ASSEMBLY_WING.DWG		
SCALE: FULL	DATE: 2-14-00	PART #: 4400.2
SHEET SIZE: E	REV.: 2	
DRAWN BY: EAW		
TOLERANCE:	UNLESS OTHERWISE SPECIFIED	
TOLERANCE HELD AFTER PLATING	ALL DIMENSIONS ARE IN INCHES	
MATL.:	QTY.:	
FINISH:	SHEET 1 OF 1	

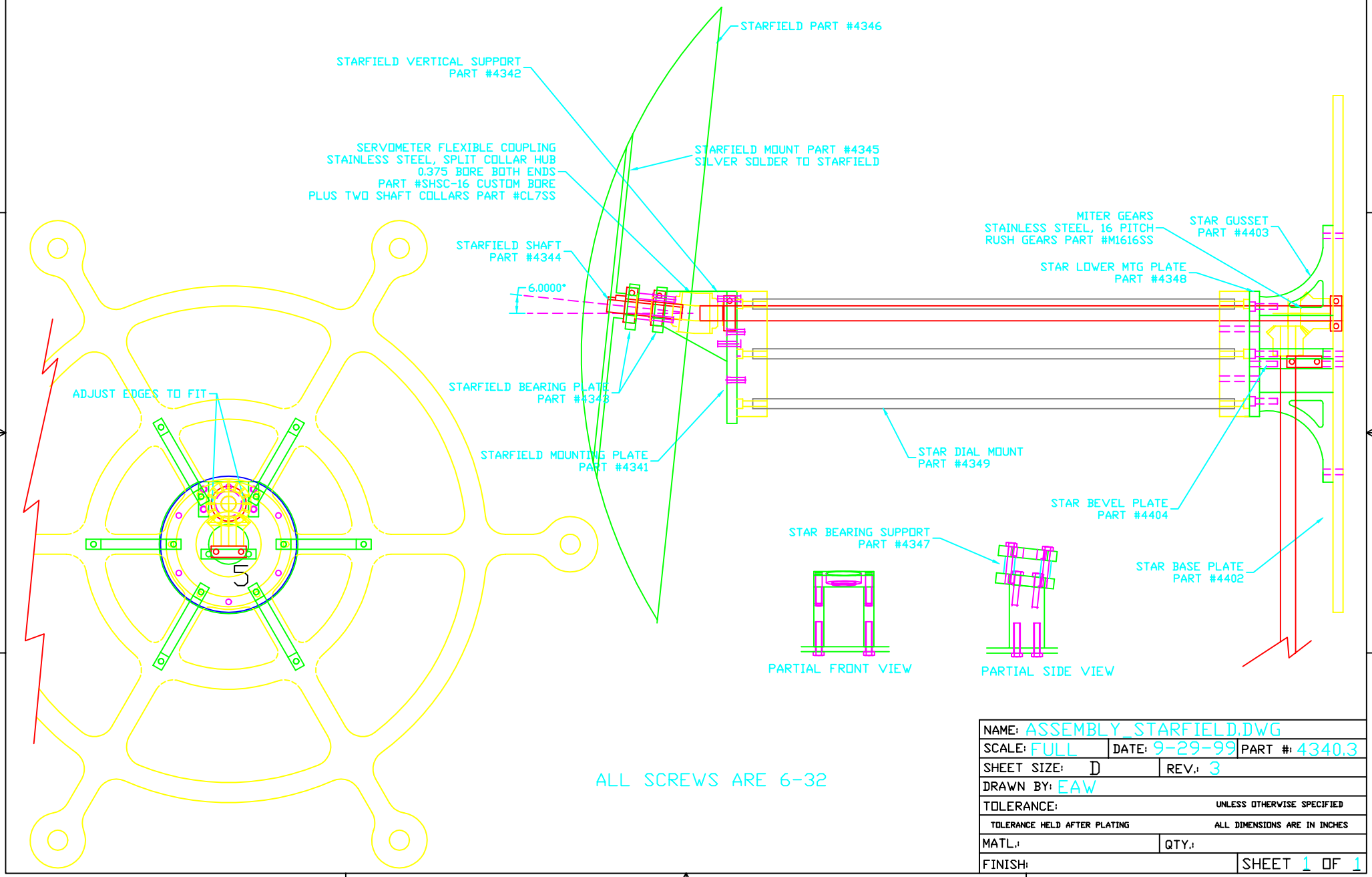
STARFIELD PART #4346
STARFIELD VERTICAL SUPPORT
PART #4342
SERVOMETER FLEXIBLE COUPLING
STAINLESS STEEL, SPLIT COLLAR HUB
0.375 BORE BOTH ENDS
PART #SHSC-16 CUSTOM BORE
PLUS TWO SHAFT COLLARS PART #CL7SS
STARFIELD MOUNT PART #4345
SILVER SOLDER TO STARFIELD
MITER GEARS
STAINLESS STEEL, 16 PITCH
RUSH GEARS PART #M1616SS
STAR GUSSET
PART #4403
STARFIELD SHAFT
PART #4344
STAR LOWER MTG PLATE
PART #4348
6.0000°
ADJUST EDGES TO FIT
STARFIELD BEARING PLATE
PART #4343
STARFIELD MOUNTING PLATE
PART #4341
STAR DIAL MOUNT
PART #4349
STAR BEVEL PLATE
PART #4404
STAR BEARING SUPPORT
PART #4347
STAR BASE PLATE
PART #4402
PARTIAL FRONT VIEW
PARTIAL SIDE VIEW
ALL SCREWS ARE 6-32
NAME: ASSEMBLY_STARFIELD.DWG
SCALE: FULL
DATE: 9-29-99
PART #: 4340.3
SHEET SIZE: D
REV.: 3
DRAWN BY: EAW
TOLERANCE:
UNLESS OTHERWISE SPECIFIED
TOLERANCE HELD AFTER PLATING
ALL DIMENSIONS ARE IN INCHES
MATL.:
QTY.:
FINISH:
SHEET 1 OF 1

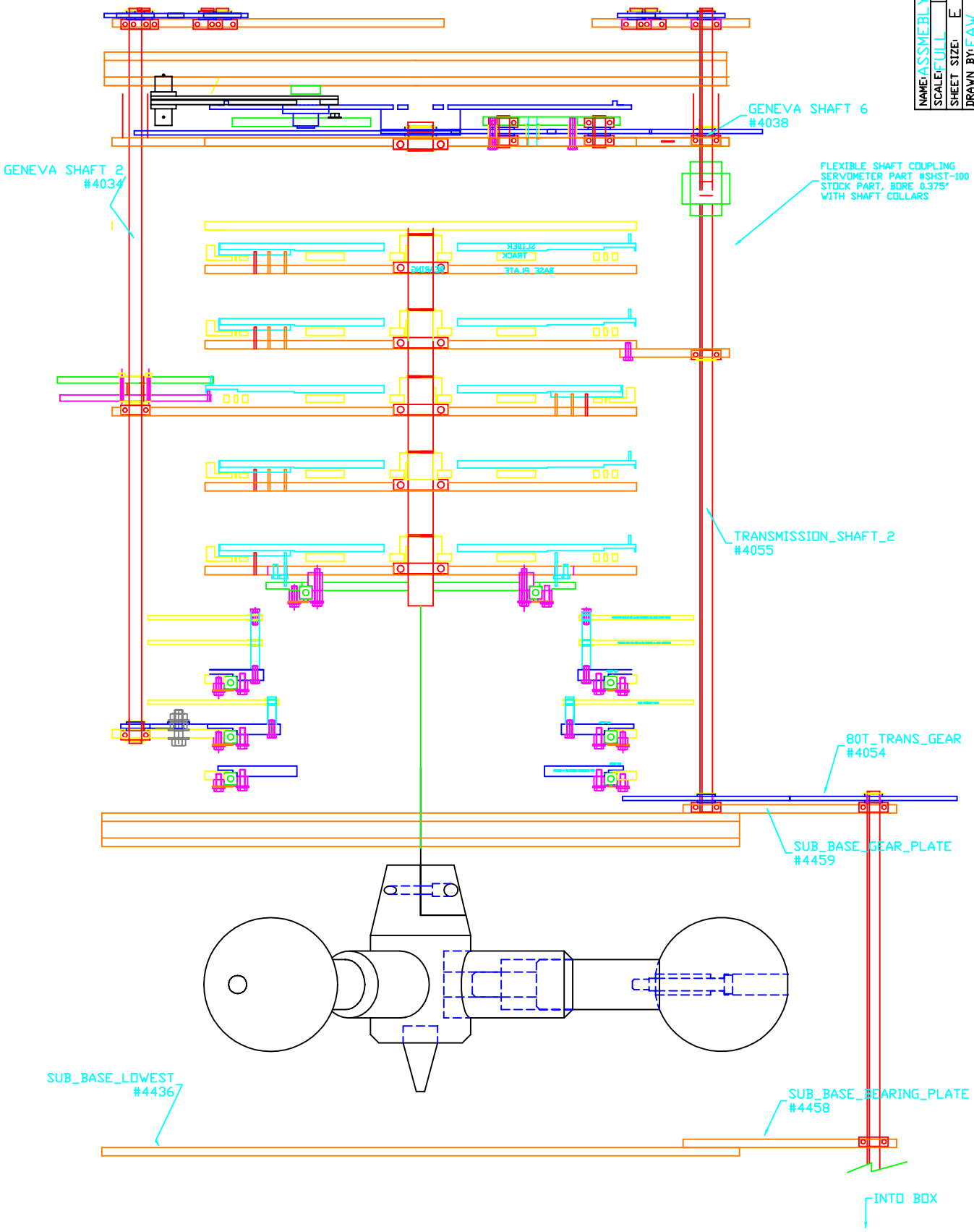

NAME: ASSMEBLY SIDE 3&6.DWG
SCALE: FULL
DATE: 2-15-00
PART #: 4020.2
SHEET SIZE: E
REV.: 2
DRAWN BY: EAW
TOLERANCE:
UNLESS OTHERWISE SPECIFIED
ALL DIMENSIONS ARE IN INCHES
TOLERANCE HELD AFTER PLATING
MATL.:
QTY.:
FINISH:
SHEET 1 OF 1

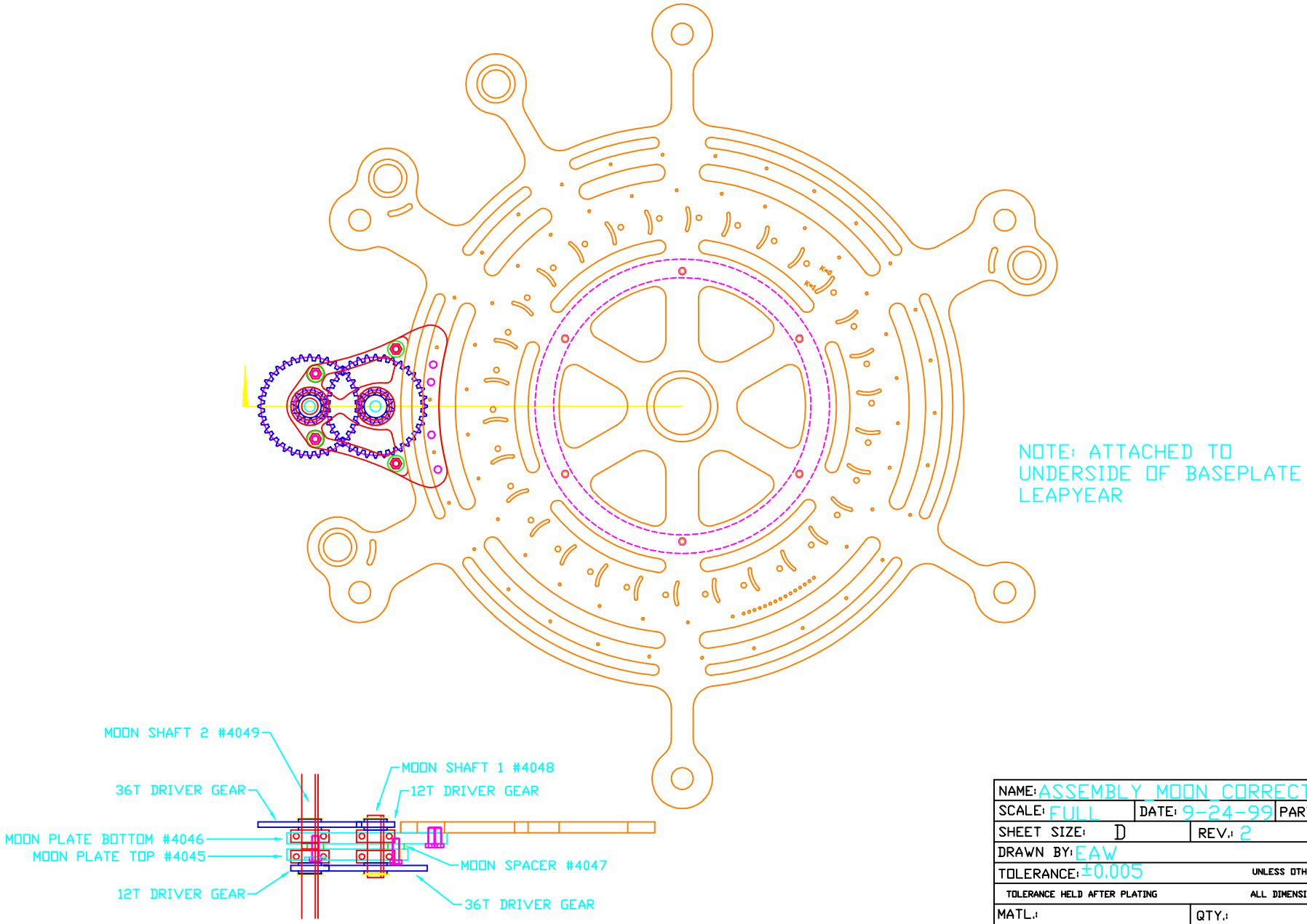

NAME: ASSEMBLY_MOON_CORRECT.DWG		
SCALE: FULL	DATE: 9-24-99	PART #: 4050.2
SHEET SIZE: D	REV.: 2	
DRAWN BY: EAW		
TOLERANCE: ±0.005	UNLESS OTHERWISE SPECIFIED	
TOLERANCE HELD AFTER PLATING	ALL DIMENSIONS ARE IN INCHES	
MATL.:	QTY.:	
FINISH:	SHEET 1 OF 1	

PARTIAL SECTION LR:

FOR TOP VIEW SEE PART #4010

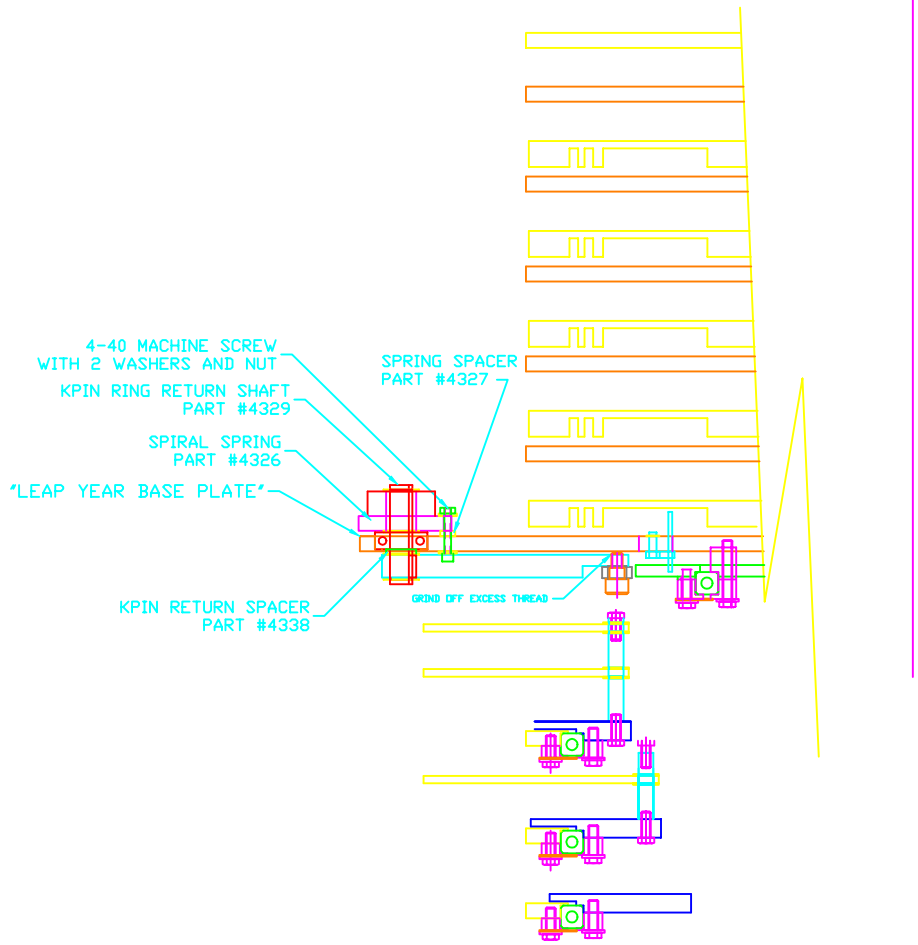

NAME: ASSEMBLY_LEAPCAM_3.DWG		
SCALE: FULL	DATE: 2-15-00	PART #: 4320.4
SHEET SIZE: D	REV.: 4	
DRAWN BY: EAW/JWS		
TOLERANCE:	UNLESS OTHERWISE SPECIFIED	
TOLERANCE HELD AFTER PLATING	ALL DIMENSIONS ARE IN INCHES	
MATL.:	QTY.:	
FINISH:	SHEET 3 OF 3	

PARTIAL SECTION LC:

FOR TOP VIEW SEE PART #4010

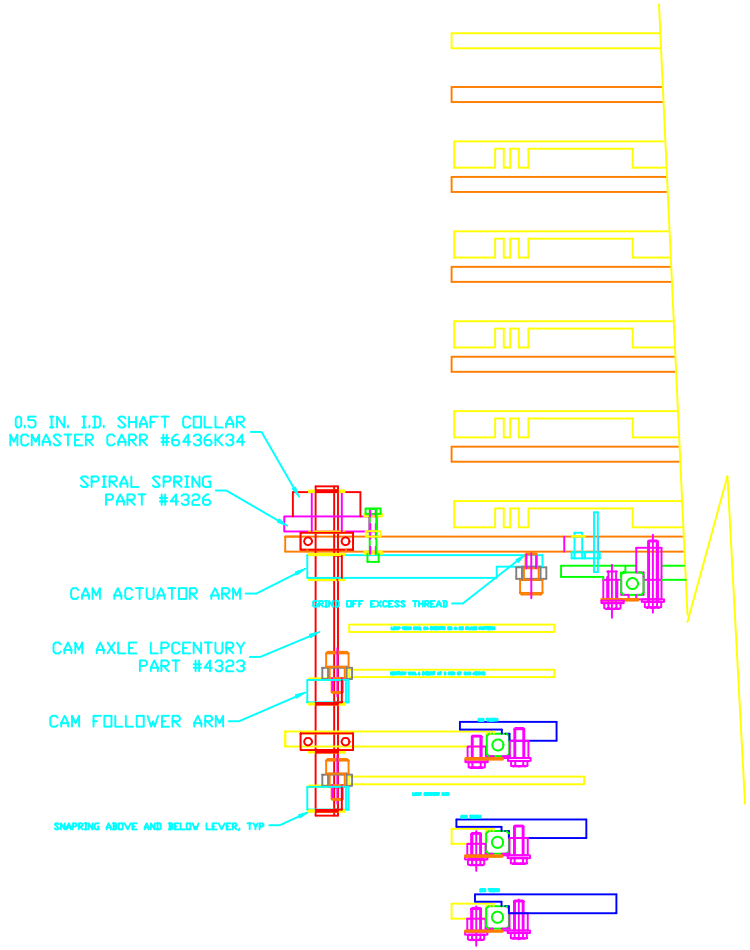

NAME: ASSEMBLY_LEAPCAM_2.DWG		
SCALE: FULL	DATE: 2-15-00	PART #: 4320.5
SHEET SIZE: D	REV.: 5	
DRAWN BY: EAW/JWS		
TOLERANCE:	UNLESS OTHERWISE SPECIFIED	
TOLERANCE HELD AFTER PLATING	ALL DIMENSIONS ARE IN INCHES	
MATL.:	QTY.:	
FINISH:	SHEET 2 OF 3	

PARTIAL SECTION LY:

FOR TOP VIEW SEE PART #4010

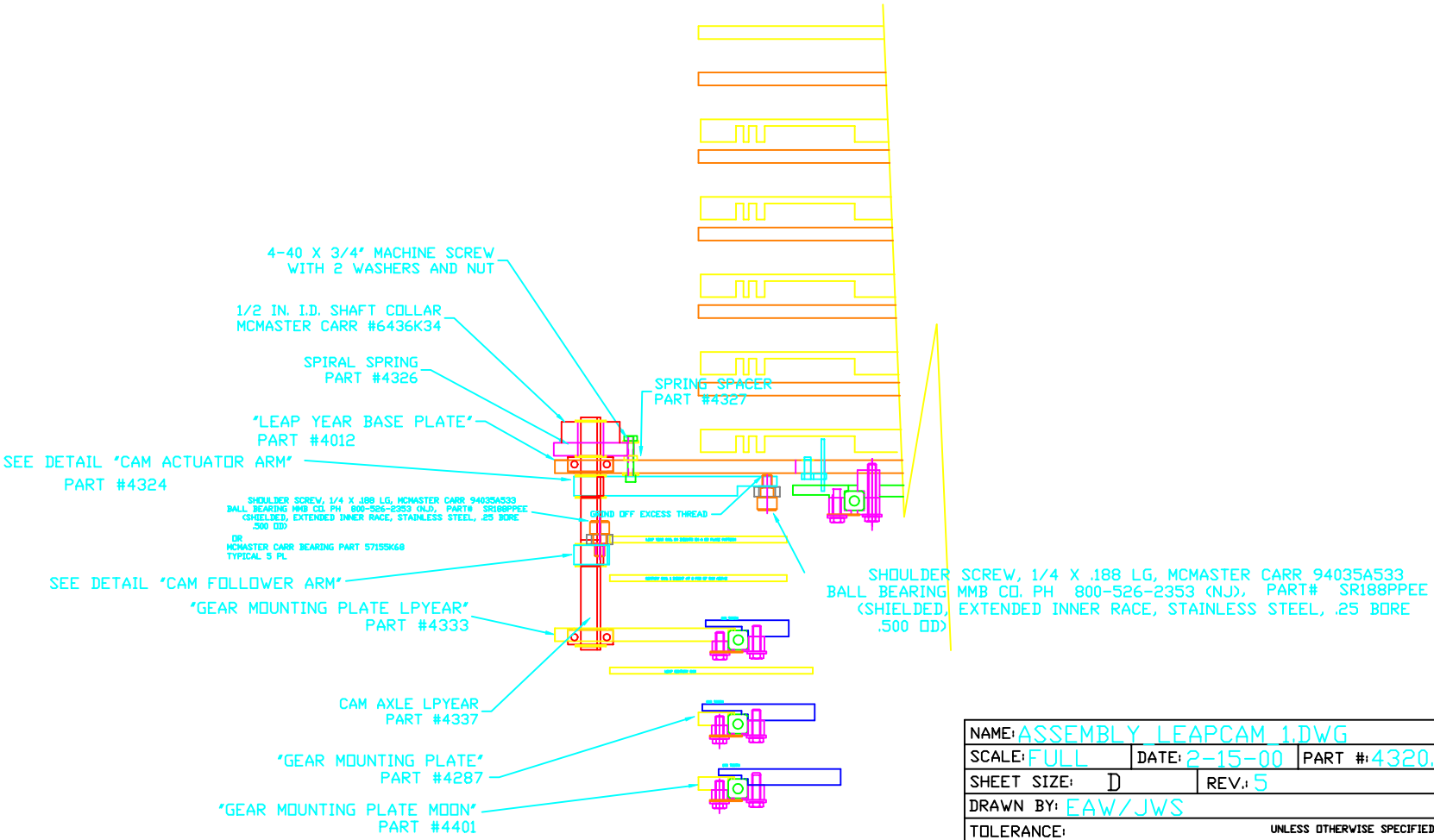

NAME: ASSEMBLY_LEAPCAM_1.DWG		
SCALE: FULL	DATE: 2-15-00	PART #: 4320.5
SHEET SIZE: D	REV.: 5	
DRAWN BY: EAW/JWS		
TOLERANCE:	UNLESS OTHERWISE SPECIFIED	
TOLERANCE HELD AFTER PLATING	ALL DIMENSIONS ARE IN INCHES	
MATL.:	QTY.:	
FINISH:	SHEET 1 OF 3	

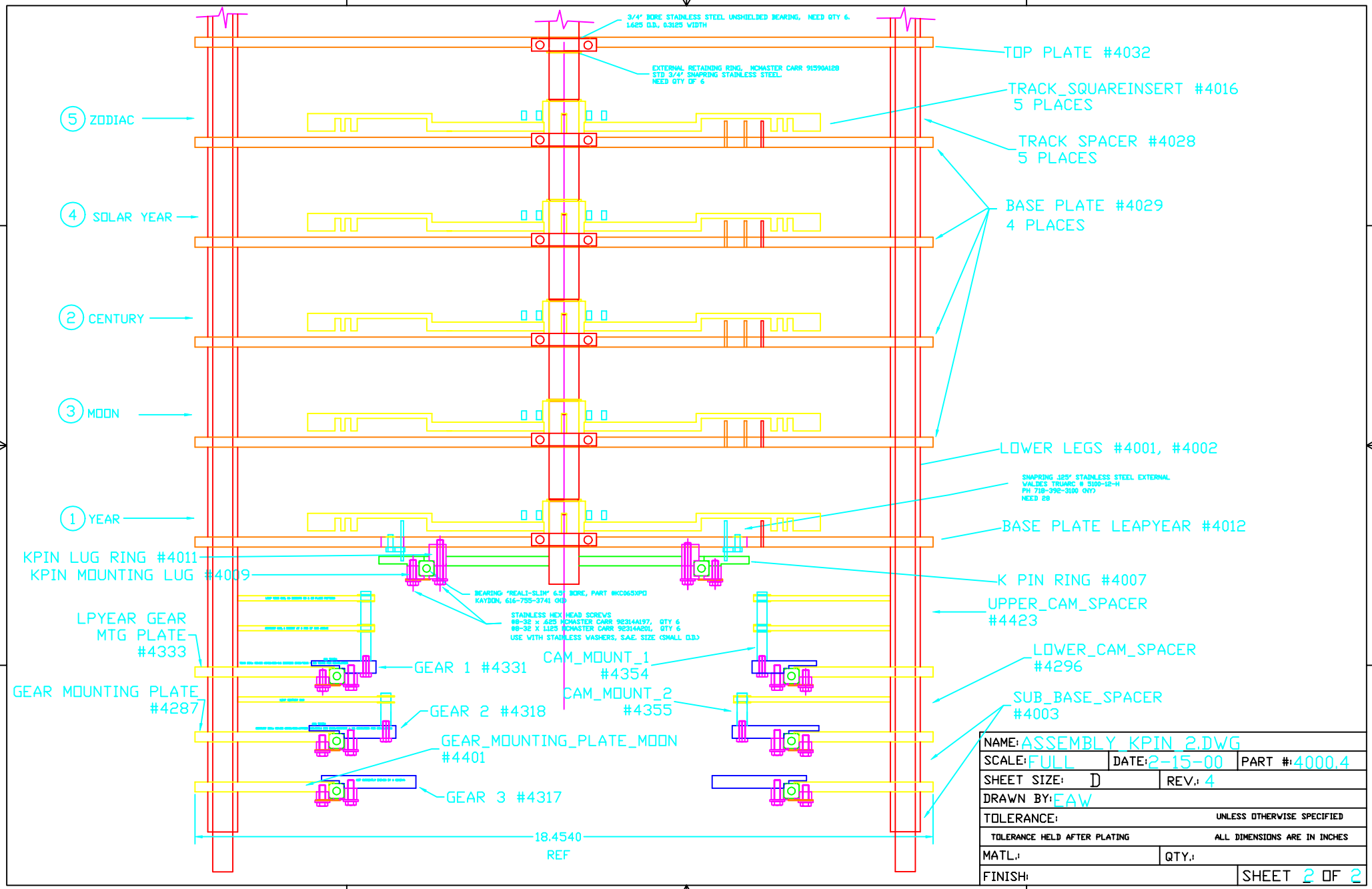
3/4" BORE STAINLESS STEEL UNSHIELDED BEARING, NEED QTY 6.
1.625 O.D., 0.3125 WIDTH
EXTERNAL RETAINING RING, MCMASTER CARR 91590A128
STD 3/4" SNAPRING STAINLESS STEEL.
NEED QTY OF 6
TOP PLATE #4032
TRACK_SQUAREINSERT #4016
5 PLACES
TRACK SPACER #4028
5 PLACES
BASE PLATE #4029
4 PLACES
5 ZODIAC
4 SOLAR YEAR
2 CENTURY
3 MOON
1 YEAR
LOWER LEGS #4001, #4002
SNAPRING .125" STAINLESS STEEL EXTERNAL
WALDES TRUARC # 5100-12-H
PH 718-392-3100 (NY)
NEED 28
BASE PLATE LEAPYEAR #4012
KPIN LUG RING #4011
KPIN MOUNTING LUG #4009
K PIN RING #4007
BEARING "REALI-SLIM" 6.5" BORE, PART #KC065XPO
KAYDON, 616-755-3741 (MI)
STAINLESS HEX HEAD SCREWS
#8-32 x .625 MCMASTER CARR 92314A197, QTY 6
#8-32 X 1.125 MCMASTER CARR 92314A201, QTY 6
USE WITH STAINLESS WASHERS, S.A.E. SIZE (SMALL O.D.)
UPPER_CAM_SPACER
#4423
LPYEAR GEAR
MTG PLATE
#4333
GEAR 1 #4331
CAM_MOUNT_1
#4354
LOWER_CAM_SPACER
#4296
GEAR MOUNTING PLATE
#4287
GEAR 2 #4318
CAM_MOUNT_2
#4355
SUB_BASE_SPACER
#4003
GEAR_MOUNTING_PLATE_MOON
#4401
GEAR 3 #4317
18.4540
REF
NAME: ASSEMBLY_KPIN_2.DWG
SCALE: FULL
DATE: 2-15-00
PART #: 4000.4
SHEET SIZE: D
REV.: 4
DRAWN BY: EAW
TOLERANCE:
UNLESS OTHERWISE SPECIFIED
TOLERANCE HELD AFTER PLATING
ALL DIMENSIONS ARE IN INCHES
MATL.:
QTY.:
FINISH:
SHEET 2 OF 2

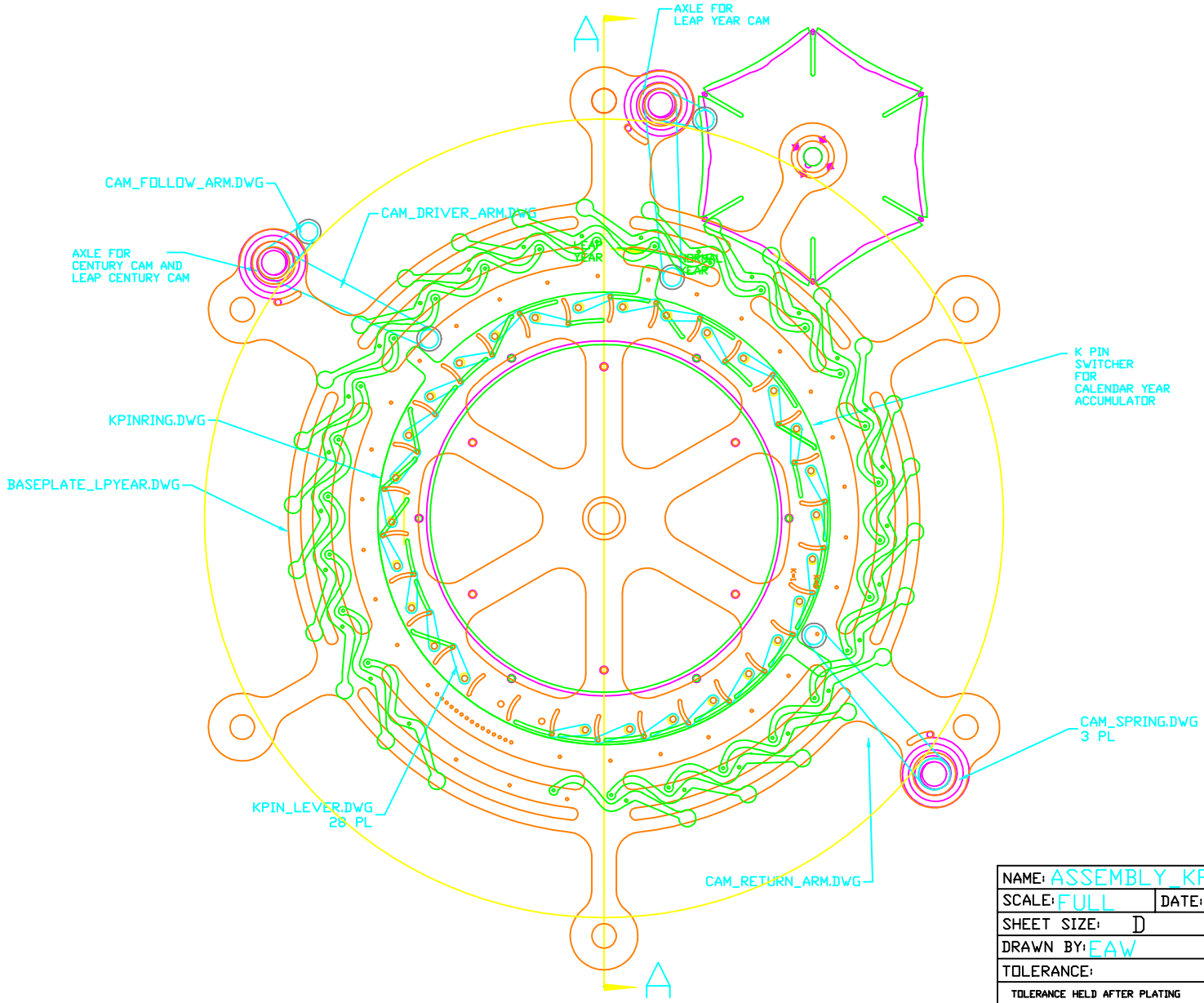

NAME: ASSEMBLY_KPIN_1.DWG		
SCALE: FULL	DATE: 9-29-99	PART #: 4000.2
SHEET SIZE: D	REV.: 2	
DRAWN BY: EAW		
TOLERANCE:	UNLESS OTHERWISE SPECIFIED	
TOLERANCE HELD AFTER PLATING	ALL DIMENSIONS ARE IN INCHES	
MATL.:	QTY.:	
FINISH:	SHEET 1 OF 2	

All shafts 0.375″ diameter

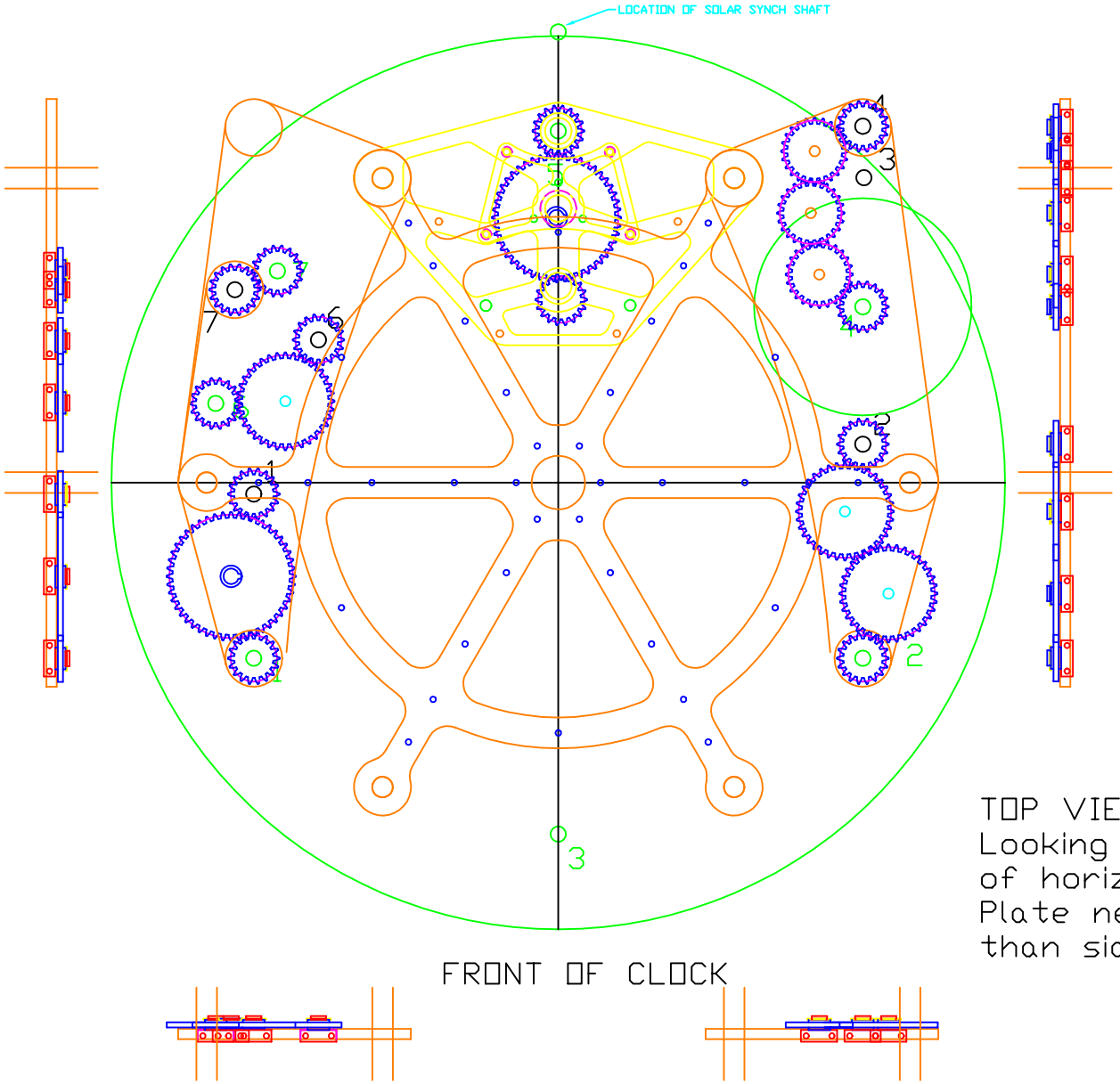

Lower - green
Upper - white
Support - orange

TOP VIEW
Looking down on top layer
of horizontal adder portion
Plate near the top is 0.5″ lower
than side plates ("wings")

FRONT OF CLOCK

NAME: ASSEMBLY_WING.DWG		
SCALE: FULL	DATE: 2-14-00	PART #: 4400.2
SHEET SIZE: E	REV.: 2	
DRAWN BY: EAW		
TOLERANCE:	UNLESS OTHERWISE SPECIFIED	
TOLERANCE HELD AFTER PLATING	ALL DIMENSIONS ARE IN INCHES	
MATL.:	QTY.:	
FINISH:	SHEET 1 OF 1	

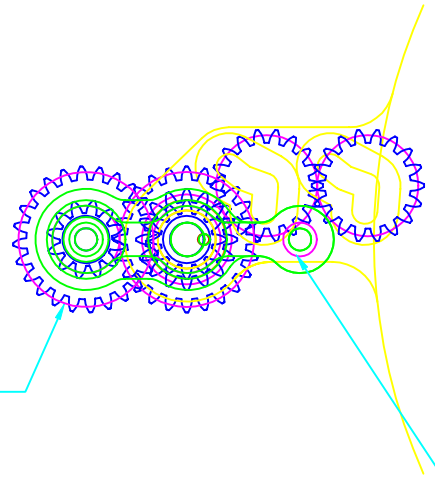

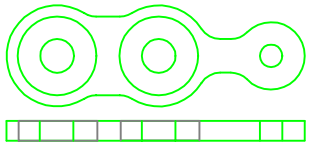

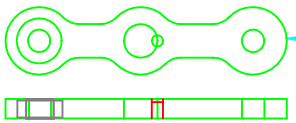

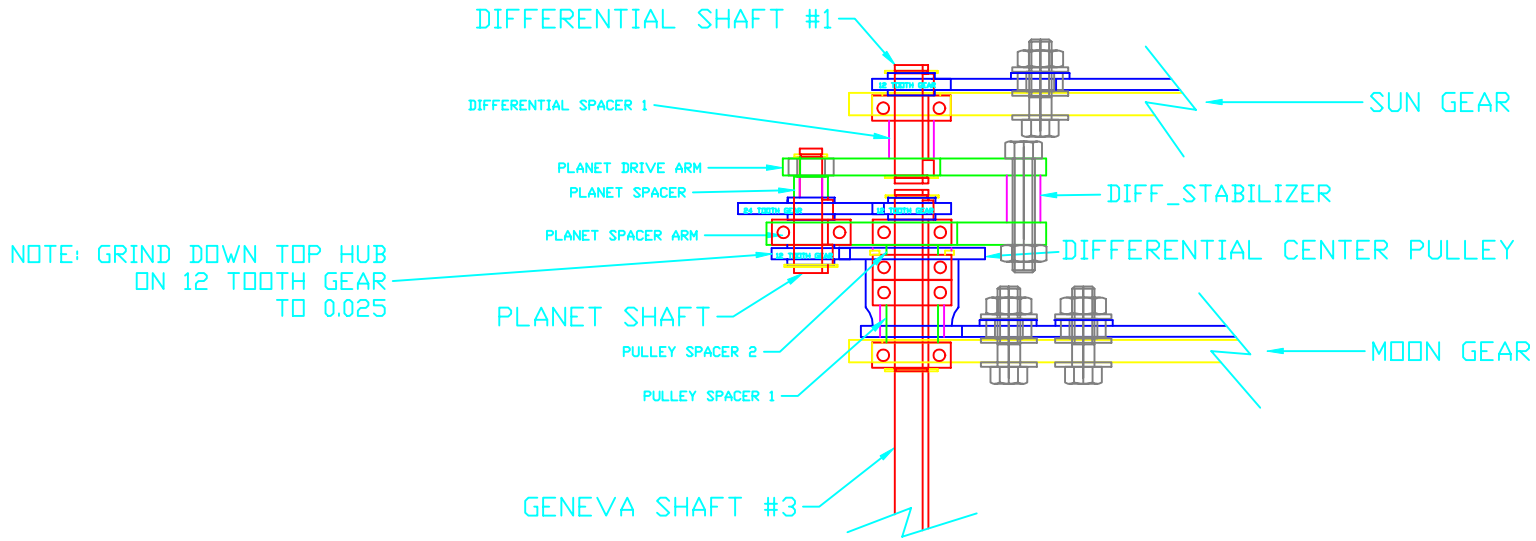

NOTE:
DIFFERENTIAL #2 (ON SOLAR YEAR/
SIDERIAL DAY DIAL)
HAS DIFF_SHAFT 2 AND
NO DIFFERENTIAL SPACER.
ALL OTHER PARTS REMAIN
THE SAME.

NAME: ASSEMBLY_DIFFERENTIAL_SUB.DWG		
SCALE: FULL	DATE: 9-29-99	PART #: 4300.5
SHEET SIZE: C	REV.: 5	
DRAWN BY: EAW		
TOLERANCE:	UNLESS OTHERWISE SPECIFIED	
TOLERANCE HELD AFTER PLATING	ALL DIMENSIONS ARE IN INCHES	
MATL.:	QTY.:	
FINISH:	SHEET 1 OF 1	

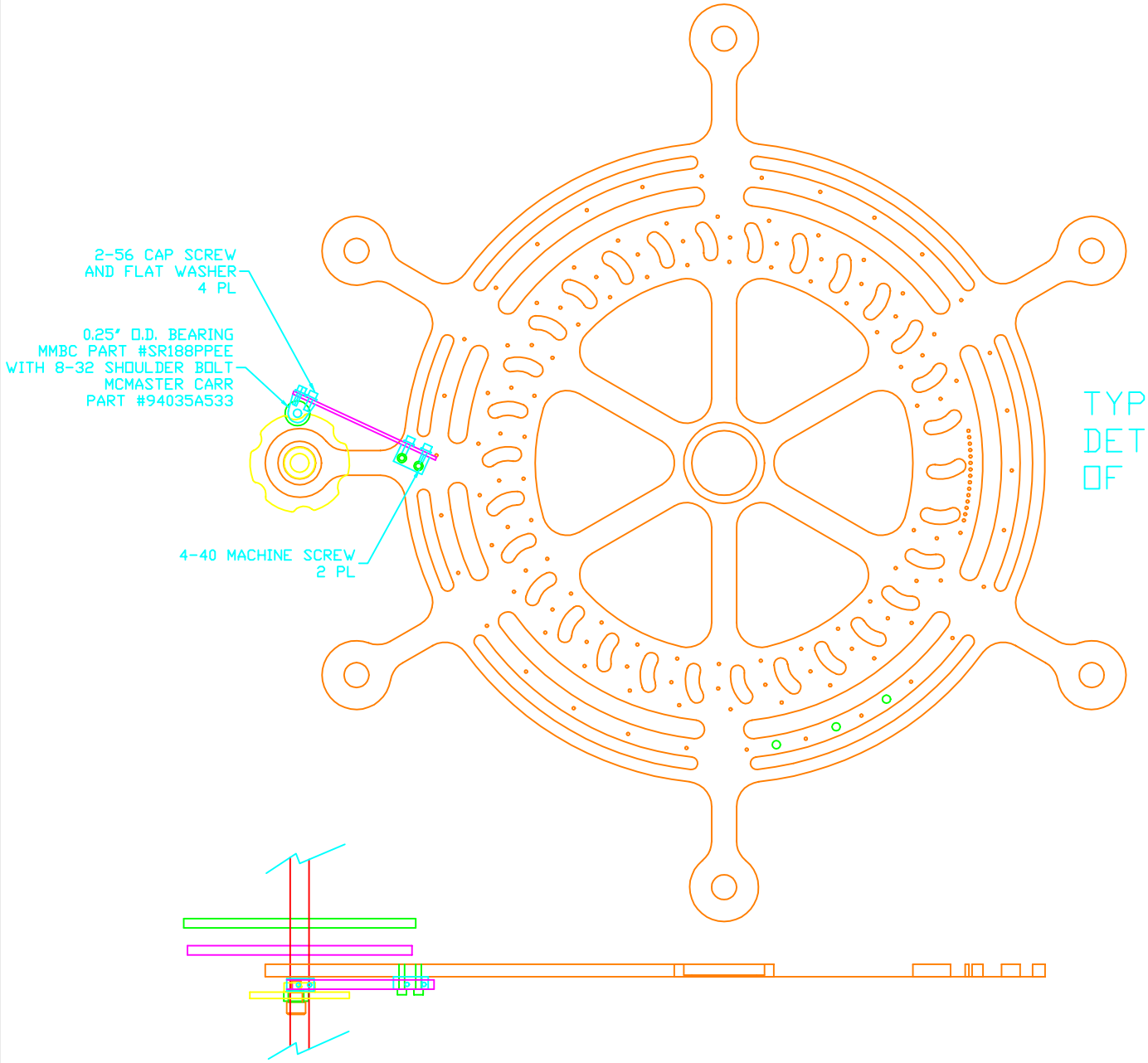

TYPICAL ADDER LAYER WITH
DETENT ON UNDERSIDE
OF GENEVAS

NAME: DETENT.DWG		
SCALE: FULL	DATE: 2-4-00	PART #: 4060.1
SHEET SIZE: D	REV.: 1	
DRAWN BY: EAW		
TOLERANCE:	UNLESS OTHERWISE SPECIFIED	
TOLERANCE HELD AFTER PLATING	ALL DIMENSIONS ARE IN INCHES	
MATL.:	QTY.:	
FINISH:	SHEET 1 OF 1	

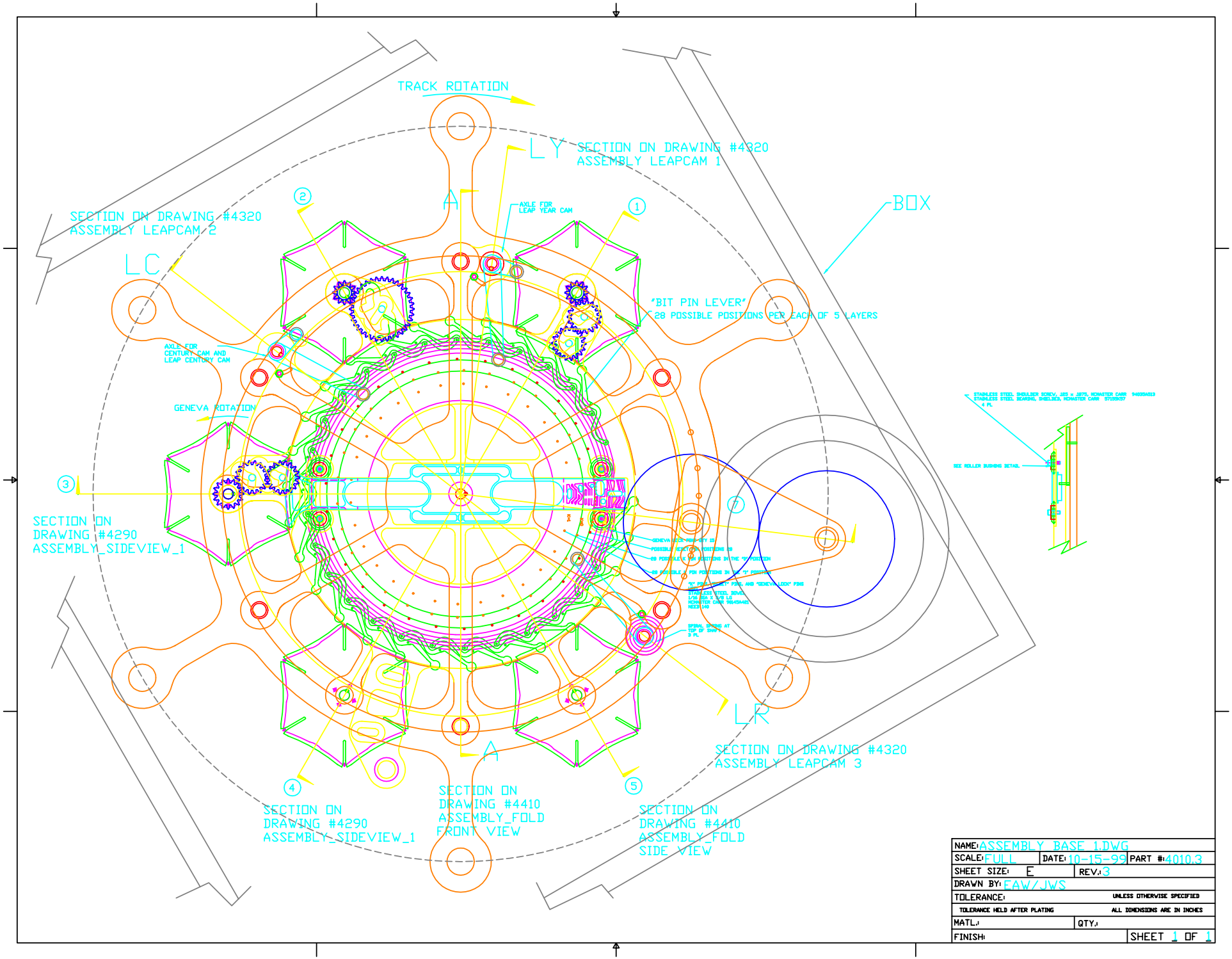

NAME: ASSEMBLY BASE 1.DWG			
SCALE: FULL	DATE: 10-15-99	PART #: 4010.3	
SHEET SIZE: E		REV.: 3	
DRAWN BY: EAW/JWS			
TOLERANCE:		UNLESS OTHERWISE SPECIFIED	
TOLERANCE HELD AFTER PLATING		ALL DIMENSIONS ARE IN INCHES	
MATL.:		QTY.:	
FINISH:		SHEET 1 OF 1	

CLOCK	Bits=	27		Longitude=	122.4601389	hex digits=		7	Gmt offset=	8:09					
PROGRAM	upperbound=	134217728		Longitude=	122° 27' 36.5				as decimal=	8.164009259				leap cycle	
Accumulators	**Period**	**days/per**	**steps/per**	**steps/hour**	**K**	**Hex K**	**per hour**		**Bits Offset**	**deg/hour**	**KI**	**Hex KI**		134211960	7FFE978
	Zodiac	9417404.853	96	4.25E-07	57	0000039	1.5928E-06		0	1.5928E-06	67108864	4000000		134210736	07FFE4B0
	Solar Year	365.242198	288	3.29E-02	4409711	043496F	0.041068639		5	0.041068639	67108864	4000000		536846616	1FFFA118
	Century	36524.75	1	1.14E-06	153	0000099	1.14078E-06		10	4.06614E-06	134216044	7FFF96C	use a diffenet value to minmize day slow	24296	00005EE8
	Month	29.5305882	32	4.52E-02	6060054	05C7816	0.507947891		15	0.507947891	49225892	2EF20A4	next time round K		
	Nonleap Year	365	1	1.14E-04	15321	0003BD9	0.000114079		20	0.000410959	134033918	7FD31FE	but leave this truncated		
	Leap Year	366	1	1.14E-04	15279	0003BAF	0.041068605			0.000409836					
														402634656	
	Name	*Start*		*Pre Midnight*	*Post Midnight*										
	Turn	**0**	**1**	**11**	**12**	**1248**	**1272**		**1296**	**1297**	**876611**	**876612**			
	Year	1999	1999	1999	2000	2000	2000		2000	2000	2099	2100			
	Date&Time	12/31/99 12:30	12/31 13:30	12/31 23:30	1/1 0:30	2/21 12:30	2/22 12:30		2/23 12:30	2/23 13:30	12/31 23:30	1/1 0:30			
	Solar Time	12:30 PM	1:30 PM	11:30 PM	12:30 AM	12:30 PM	12:30 PM		12:30 PM	1:30 PM	11:30 PM	12:30 AM			
	EOT	-0:03:00													
	GMT	20:42:51	21:39:50	7:39:50	8:39:50	20:39:50	20:39:50		20:39:50	21:39:50	7:39:50	8:39:50			
	Sun	(deggres from top)													
	Real	7.5	22.5	172.5	187.5	7.5	7.5		7.5	22.5	172.5	187.5			
	Dial	7.5	22.5	172.5	187.5	7.5	7.5		7.5	22.5	172.5	187.5			
	Moon	(degrees from SUN)													
	Real	66.0011	66.5090	72.0964	78.1918	352.1108	278.2205		216.5210	155.3294	108.0382	61.2549			
	Dial	67.50	67.50	67.50	78.75	348.75	281.25		213.75	157.50	112.50	56.25			
	Dial Position	6	6	6	7	31	25		19	14	10	5			
	Real Phase	30%	30%	35%	40%	0%	43%		90%	95%	65%	20%			
	Dial Phase	31%	31%	31%	40%	1%	40%		92%	90%	69%	22%			
	Solar Year	(degrees from winter solstice)													
	Real	7.431947861	7.4730	7.8837	7.9248	58.6856	59.6713		60.6569	60.6980	8.6527	8.6938			
	Dial	7.43	7.4	7.4	7.4	58.7	59.9		61.2	61.2	8.7	8.7			
	Rete	(mark from top)													
	Real	7.52025	22.4792	172.0685	187.0274	316.2666	315.2809		314.2953	329.2542	171.2995	186.2584			
	Dial	7.5	22.5	172.5	187.5	316.3	315.0		313.8	328.8	171.3	186.3			
	Cal. Year														
	Real	99.99868809	99.9988	99.9999	0.0001	0.1411	0.1438		0.1465	0.1466	0.0020	0.0021			
	Dial	99	99	99	0	0	0		0	0	99	99			
	Century														
	Real	19.9999869	19.9999880	19.9999994	20.0000006	20.0014106	20.0014380		20.0014653	20.0014665	21.0000063	21.0000074			
	Dial	19	19	19	20	20	20		20	20	20	20			
	Zodiac	(mark from top)													
	Real	0.005208333	5.2099E-03	5.2259E-03	5.2274E-03	7.1961E-03	7.2344E-03		7.2726E-03	7.2742E-03	1.4015E+00	1.4015E+00			
	Dial	0	0.0	0.0	0.0	0.0	0.0		0.0	0.0	0.0	0.0			
	Period	**days/per**	**steps/per**	**steps/hour**	**K**	**Hex K**	**per hour**		**Bits Offset**	**deg/hour**	**KI**	**Hex KI**			
	Zodiac	9417404.853	96	4.24745E-07	57	0000039	1.5928E-06		0	1.5928E-06	67108864	4000000			
	Total	67108864	67108921	67109491	67109548	67180000	67181368		67182736	67182793	117075691	117075748			
	Advances	0	0	0	0	0	0		0	0	0	0			
	Next	67108921	67108978	67109548	67109605	67180057	67181425		67182793	67182850	117075748	117075805			
	Pins	67108864	67108921	67109491	67109548	67180000	67181368		67182736	67182793	117075691	117075748			
	Hex	4000000	4000039	4000273	40002AC	40115E0	4011B38		4012090	40120C9	6FA6EEB	6FA6F24			
	Carry	0	0	0	0	0	0		0	0	0	0			
	Solar Year	365.242198	288	0.032854911	4409711	043496F	0.041068639		5	0.041068639	67108864	4000000			
	Total	67108864	71518575	115615685	120025396	201719072	307552136		413385200	578650431	3.86567E+12	3.86567E+12			
	Advances	0	0	0	0	41	42		43	43	28801	28801			
	Next	71518575	75928286	120025396	124435107	206128783	311961847		417794911	579091374 2	3.86567E+12	3.86568E+12			
	Pins	67108879	71518590	115615700	120025379	67501359	39116695		10732031	#NUM!	#NUM!	#NUM!			
	Hex	400000F	443497E	6E427D4	7277123	405FD2F	254DF97		A3C1EF	#NUM!	#NUM!	#NUM!			
	Carry	0	0	0	1	0	0		0	1	0	1			
	Century	36524.75	1	1.14078E-06	153	0000099	1.14078E-06		10	4.06614E-06	134216044	7FFF96C			
	Total	134216044	134216197	134217727	134217880	134406988	134410660		134414332	134414485	268337527	268337680			
	Advances	0	0	0	1	1	1		1	1	1	1			
	Next	134216197	134216350	134217880	134218033	134407141	134410813		134414485	134414638	268337680	268337833			
	Pins	134216197	134216350	134216856	305	189413	193085		195733	196010	134119952	134120105			
	Hex	7FFFA05	7FFFA9E	7FFFC98	131	2E3E5	2F23D		2FC95	3012E	7FE8210	7FE82A9			
	Carry	0	0	1	0	0	0		1	0	0	0			
	Month	29.5305882	32	0.045150924	6060054	05C7816	0.507947891		15	0.507947891	49225892	2EF20A4			
	Total	49225892	55285946	115886486	121946540	7612173284	7757614580		7903055876	7909115930	5.31236E+12	5.31237E+12			
	Advances	0	0	0	0	56	57		58	58	39580	39580			
	Next	55285946	61346000	121946540	128006594	7618233338	7763674634		7909115930	7915175984	5.31237E+12	5.31237E+12			
	Pins	49223866	55283920	115884460	121944514	95978490	107202058		118425626	124485680	#NUM!	#NUM!			
	Hex	2EF18BA	34B90D0	6E841AC	744B9C2	5B883FA	663C60A		70F081A	76B8030	#NUM!	#NUM!			
	Carry	1	1	1	1	1	1		1	1	1	1			
	Cal Year	365	1	0.000114155	15321	0003BD9	0.000114079		20	0.000410959	134033918	7FD31FE			
	Total	134033918	134049239	134202449	134217728	153102572	153469268		153835964	153851243	13555736777	13555752056			
		7FD31FE	7FD6DD7	7FFC451	8000000	92028EC	925C154		92B59BC	92B956B	327FC20C9	327FC5C78			
	Advances	0	0	0	1	1	1		1	1	100	100			

	Next	134049239	134064560	134217770	134233049	153117893	153484589	153851285	153866564	13555752098	13555767377					
	Pins	134049239	134064560	133169194	15321	18900165	19266861	19633557	19648836	133979298	133994577					
	Hex	7FD6DD7	7FDA9B0	7F0002A	3BD9	12064C5	125FD2D	12B9595	12BD144	7FC5CA2	7FC9851					
	Carry	0	0	1	0	0	0	0	0	0	0					
	LEAP cycles	0	0	0	0	0	0	0	0	24	24					
	LEAP TICKS	0	0	0	1	1237	1261	1285	1286	210816	210817					
	NORM TICKS	0	1	11	11	11	11	11	11	665795	665795					
								1296	54.00	402634656						
								8784	1296	536837105						
								17531		-67075057						
										18528						

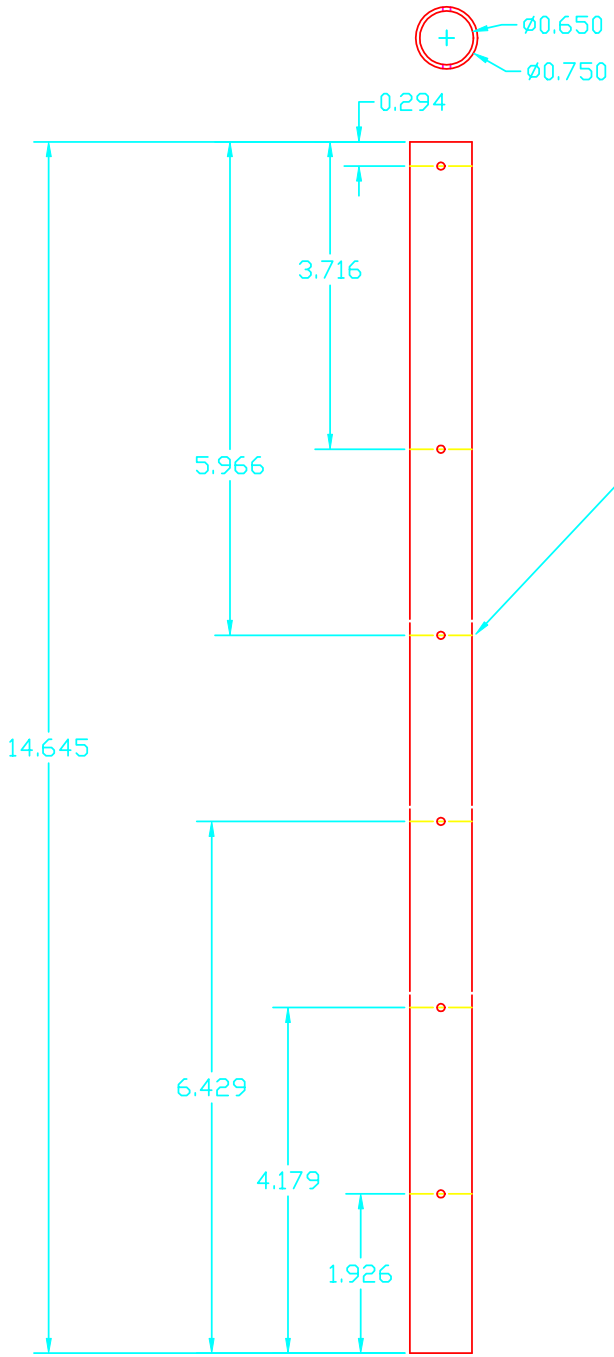

HOLES FOR DOG POINT SETSCREW
THROUGH BOTH SIDES OF SHAFT
0.093" DIA. 6 PL

DIMENSIONS GIVEN FROM
ENDS OF SHAFT
TO TOP OF GROOVES

NAME: CENTERSHAFT_HOLLOW.DWG		
SCALE: FULL	DATE: 12-9-99	PART #: 4018.6
SHEET SIZE: C	REV.: 6	
DRAWN BY: EAW		
TOLERANCE: ±0.001	UNLESS OTHERWISE SPECIFIED	
TOLERANCE HELD AFTER PLATING	ALL DIMENSIONS ARE IN INCHES	
MATL.: COLD FINISHED OR GROUND STAINLESS STEEL	QTY.: 1	
FINISH:	SHEET 1 OF 1	

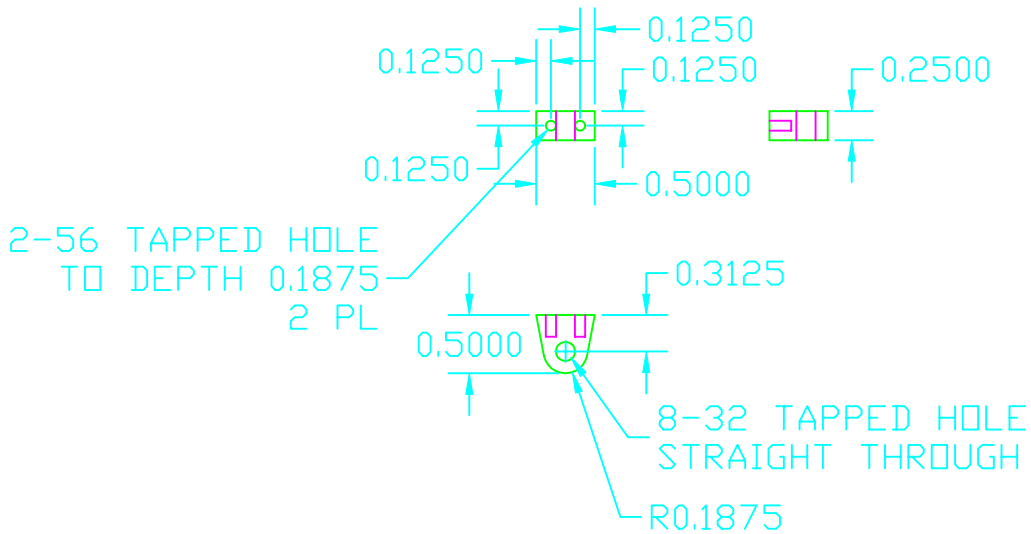

NAME: DETENT_BEARING_BLOCK.DWG		
SCALE: FULL	DATE: 2-7-00	PART #: 4062.1
SHEET SIZE: B	REV.: 1	
DRAWN BY: EAW		
TOLERANCE: ±0.005	UNLESS OTHERWISE SPECIFIED	
TOLERANCE HELD AFTER PLATING	ALL DIMENSIONS ARE IN INCHES	
MATL.: MONEL OR STAINLESS STEEL	QTY.: 5	
FINISH: DEBURR EDGES		SHEET 1 OF 1

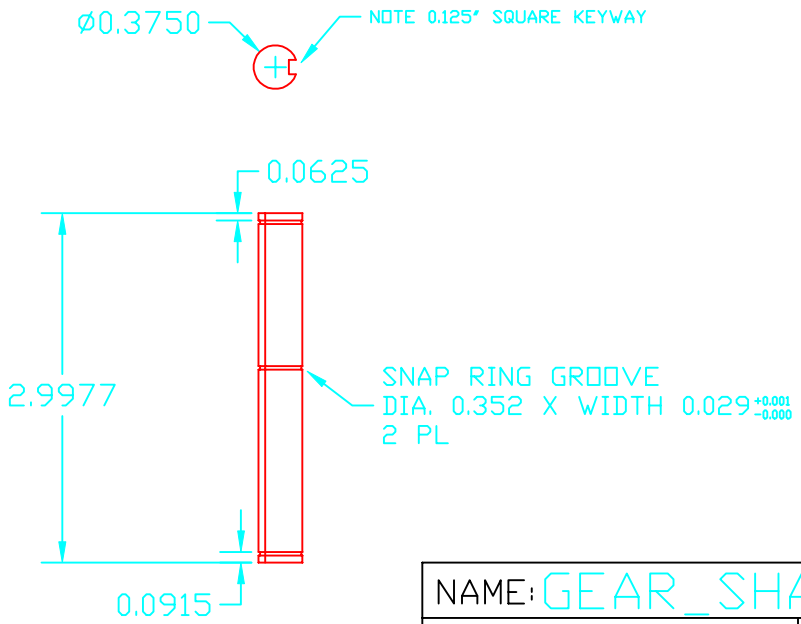

NAME: GEAR_SHAFT_6.DWG		
SCALE: FULL	DATE: 9-30-99	PART #: 4456.2
SHEET SIZE: B	REV.: 2	
DRAWN BY: EAW		
TOLERANCE: ±0.001	UNLESS OTHERWISE SPECIFIED	
TOLERANCE HELD AFTER PLATING	ALL DIMENSIONS ARE IN INCHES	
MATL.: COLD FINISHED OR GROUND STAINLESS STEEL BAR	QTY.: 1	
FINISH: GRIND AND CHAMFER ROD ENDS	SHEET 1 OF 1	

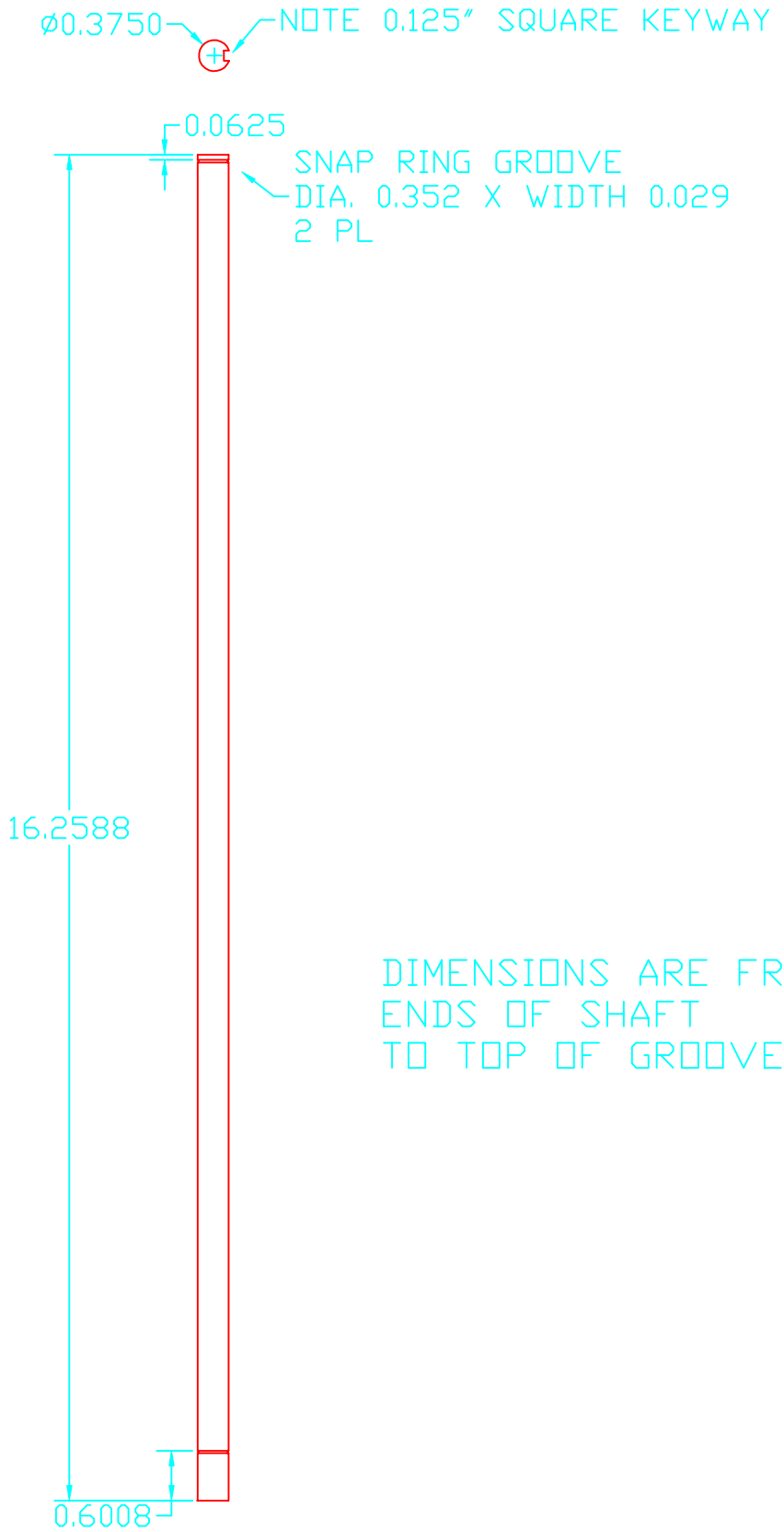

DIMENSIONS ARE FROM
ENDS OF SHAFT
TO TOP OF GROOVES

NAME: GEAR_SHAFT_5.DWG			
SCALE: FULL	DATE: 9-28-99	PART #: 4455.1	
SHEET SIZE: C	REV.: 1		
DRAWN BY: EAW			
TOLERANCE: ±0.001	UNLESS OTHERWISE SPECIFIED		
TOLERANCE HELD AFTER PLATING	ALL DIMENSIONS ARE IN INCHES		
MATL.: COLD FINISHED OR GROUND STAINLESS STEEL BAR	QTY.: 1		
FINISH: GRIND AND CHAMFER ROD ENDS	SHEET 1 OF 1		

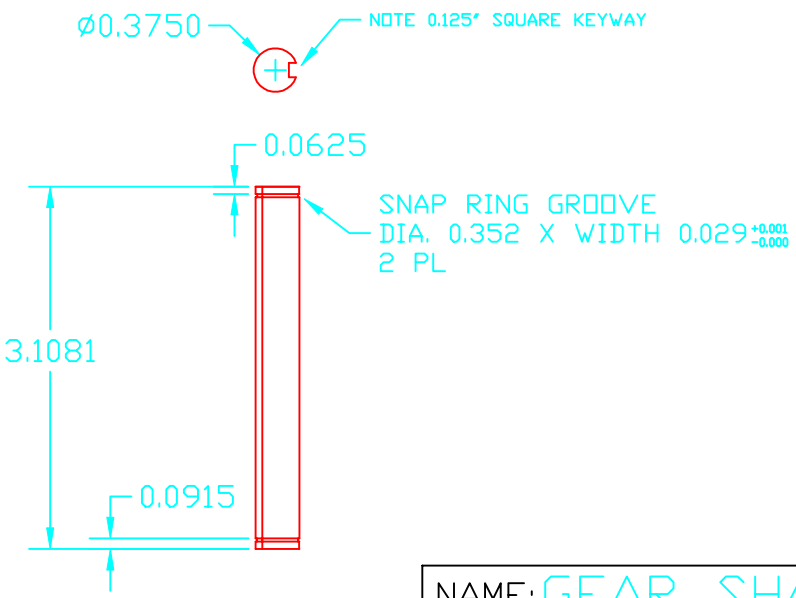

NOTE: SAME AS GEAR SHAFT 3

NAME: GEAR_SHAFT_4.DWG		
SCALE: FULL	DATE: 9-28-99	PART #: 4454.1
SHEET SIZE: B	REV.: 1	
DRAWN BY: EAW		
TOLERANCE: ±0.001	UNLESS OTHERWISE SPECIFIED	
TOLERANCE HELD AFTER PLATING	ALL DIMENSIONS ARE IN INCHES	
MATL.: COLD FINISHED OR GROUND STAINLESS STEEL BAR	QTY.: 1	
FINISH: GRIND AND CHAMFER ROD ENDS	SHEET 1 OF 1	

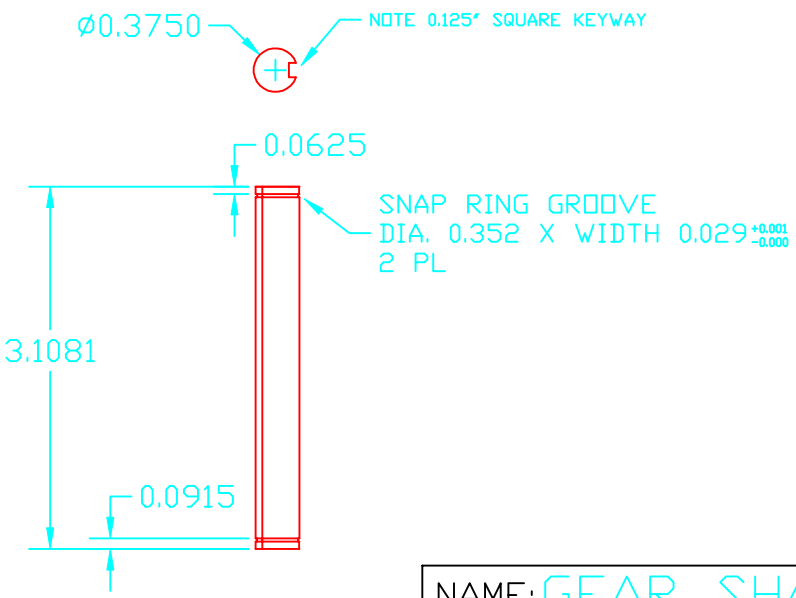

NAME: GEAR_SHAFT_3.DWG		
SCALE: FULL	DATE: 9-28-99	PART #: 4453.1
SHEET SIZE: B	REV.: 1	
DRAWN BY: EAW		
TOLERANCE: ±0.001	UNLESS OTHERWISE SPECIFIED	
TOLERANCE HELD AFTER PLATING	ALL DIMENSIONS ARE IN INCHES	
MATL.: COLD FINISHED OR GROUND STAINLESS STEEL BAR	QTY.: 1	
FINISH: GRIND AND CHAMFER ROD ENDS	SHEET 1 OF 1	

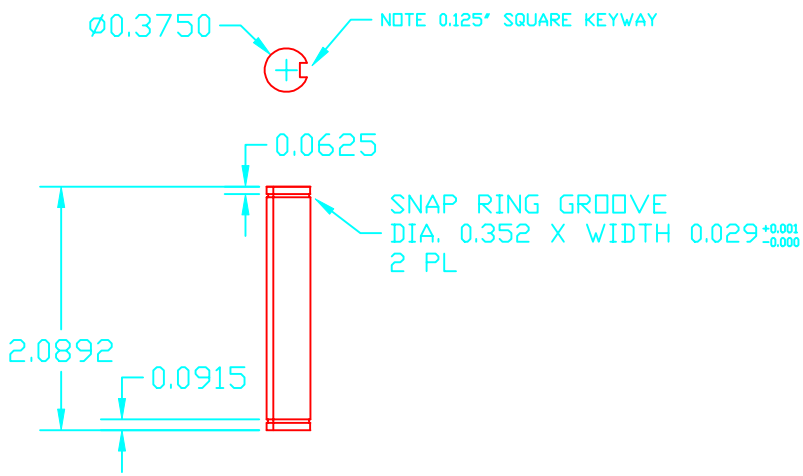

NAME: GEAR_SHAFT_2.DWG		
SCALE: FULL	DATE: 9-28-99	PART #: 4452.1
SHEET SIZE: B	REV.: 1	
DRAWN BY: EAW		
TOLERANCE: ±0.001	UNLESS OTHERWISE SPECIFIED	
TOLERANCE HELD AFTER PLATING	ALL DIMENSIONS ARE IN INCHES	
MATL.: COLD FINISHED OR GROUND STAINLESS STEEL BAR	QTY.: 1	
FINISH: GRIND AND CHAMFER ROD ENDS	SHEET 1 OF 1	

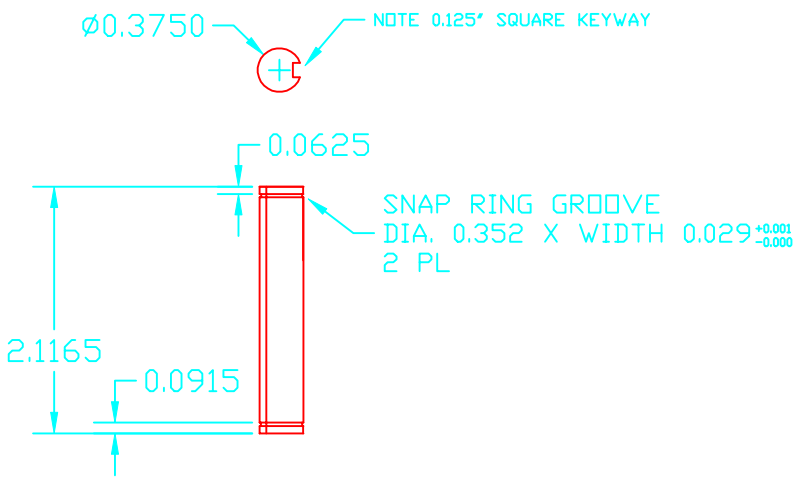

NAME: GEAR_SHAFT_1.DWG		
SCALE: FULL	DATE: 9-28-99	PART #: 4451.1
SHEET SIZE: B	REV.: 1	
DRAWN BY: EAW		
TOLERANCE: ±0.001	UNLESS OTHERWISE SPECIFIED	
TOLERANCE HELD AFTER PLATING	ALL DIMENSIONS ARE IN INCHES	
MATL.: COLD FINISHED OR GROUND STAINLESS STEEL BAR	QTY.: 1	
FINISH: GRIND AND CHAMFER ROD ENDS	SHEET 1 OF 1	

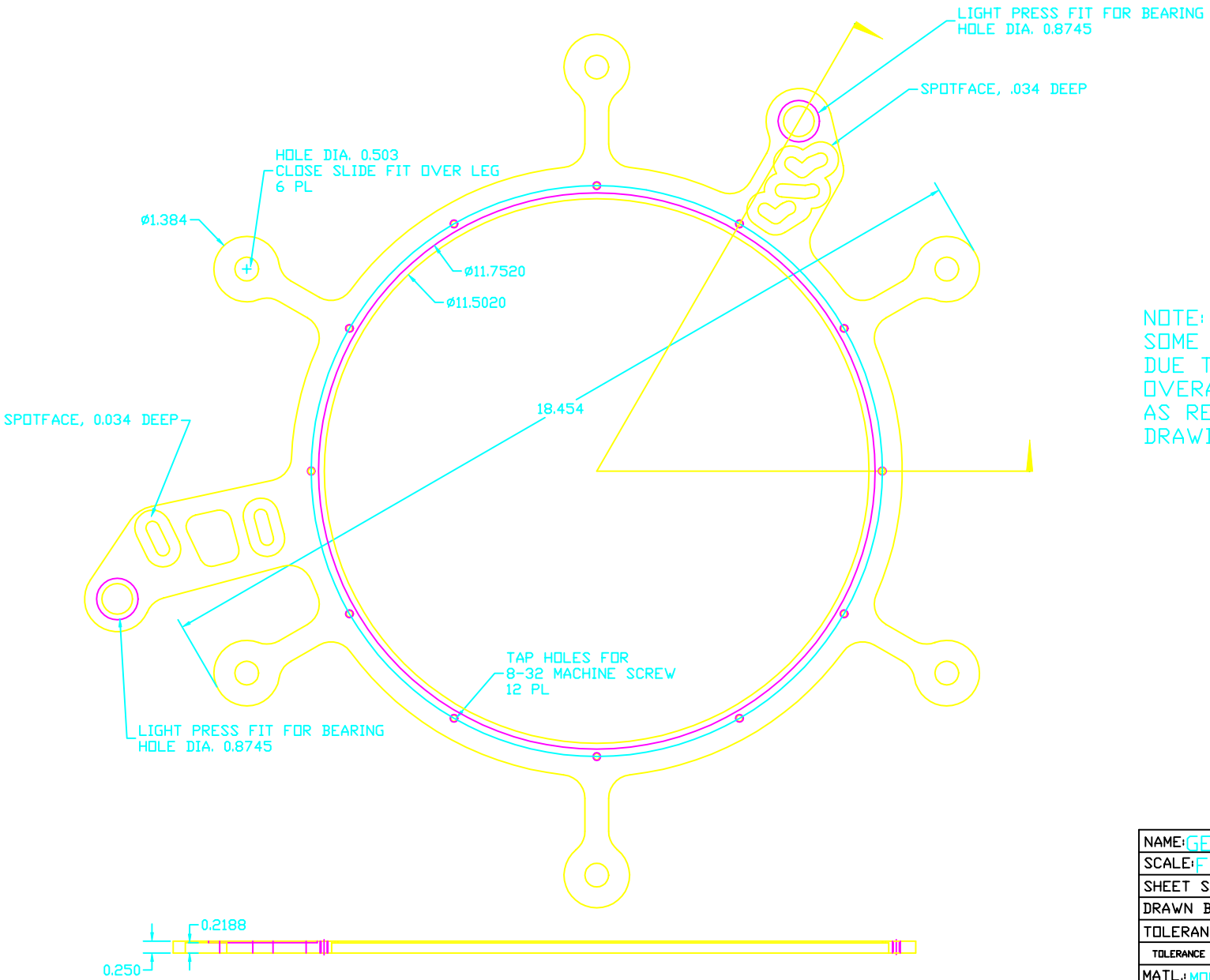

NOTE:
SOME DIMENSIONS OMITTED
DUE TO COMPLEXITY OF DRAWING.
OVERALL DIMENSIONS GIVEN
AS REFERENCE.
DRAWING IS TO SCALE.

NAME: GEAR_MTG_PLATE_MOON.DWG		
SCALE: FULL	DATE: 9-28-99	PART #: 4401.2
SHEET SIZE: D	REV.: 2	
DRAWN BY: EAW		
TOLERANCE: ±0.005	UNLESS OTHERWISE SPECIFIED	
TOLERANCE HELD AFTER PLATING	ALL DIMENSIONS ARE IN INCHES	
MATL.: MONEL	QTY.: 1	
FINISH:	SHEET 1 OF 1	

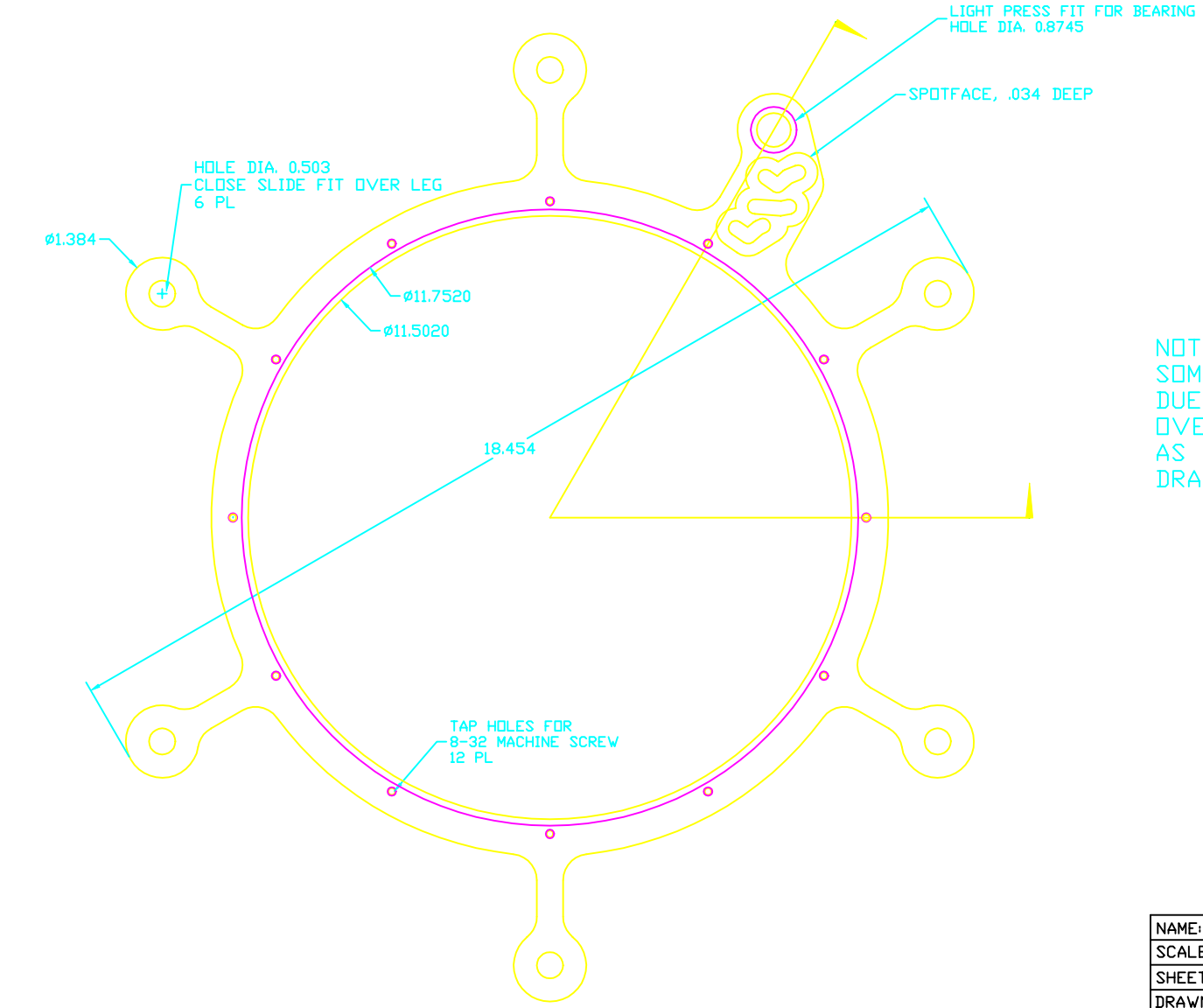

NOTE:
SOME DIMENSIONS OMITTED
DUE TO COMPLEXITY OF DRAWING.
OVERALL DIMENSIONS GIVEN
AS REFERENCE.
DRAWING IS TO SCALE.

NAME: GEAR_MOUNTING_PLATE.DWG		
SCALE: FULL	DATE: 4-6-99	PART #: 4287.3
SHEET SIZE: D	REV.: 3	
DRAWN BY: EAW/JWS		
TOLERANCE: ±0.005	UNLESS OTHERWISE SPECIFIED	
TOLERANCE HELD AFTER PLATING	ALL DIMENSIONS ARE IN INCHES	
MATL.: MONEL	QTY.: 6	
FINISH:	SHEET 1 OF 1	

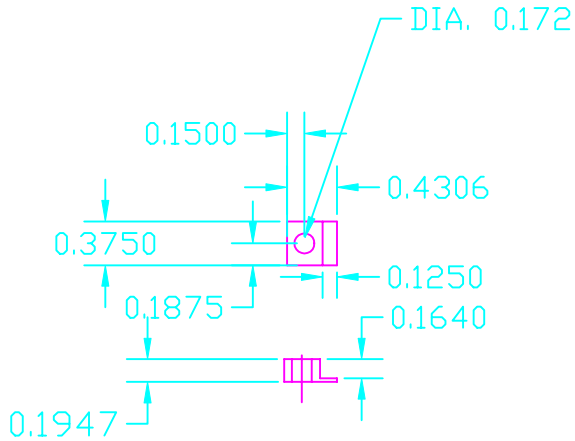

#4288.2 GEAR MOUNTING LUG 1

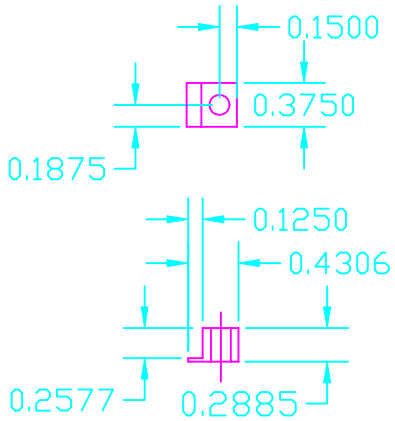

#4289.2 GEAR MOUNTING LUG 2

NAME: GEAR_LUGS.DWG		
SCALE: FULL	DATE: 4-6-99	PART #: 4288.2,4289.2
SHEET SIZE: B	REV.: 2	
DRAWN BY: EAW/JWS		
TOLERANCE: ±0.003	UNLESS OTHERWISE SPECIFIED	
TOLERANCE HELD AFTER PLATING	ALL DIMENSIONS ARE IN INCHES	
MATL.: MONEL OR STAINLESS STEEL	QTY.: 140 OF EACH PART	
FINISH:	SHEET 1 OF 1	

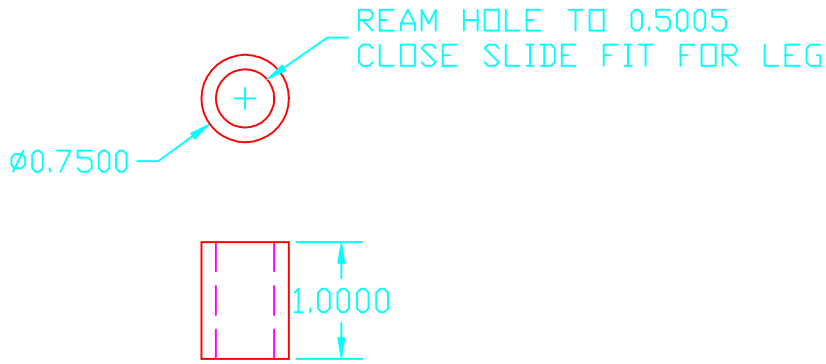

NAME: GEAR_LEG_SPACER.DWG		
SCALE: FULL	DATE: 9-27-99	PART #: 4417.3
SHEET SIZE: B	REV.: 3	
DRAWN BY: EAW/JWS		
TOLERANCE: ±0.003	UNLESS OTHERWISE SPECIFIED	
TOLERANCE HELD AFTER PLATING	ALL DIMENSIONS ARE IN INCHES	
MATL.: STAINLESS STEEL	QTY.: 24	
FINISH:	SHEET 1 OF 1	

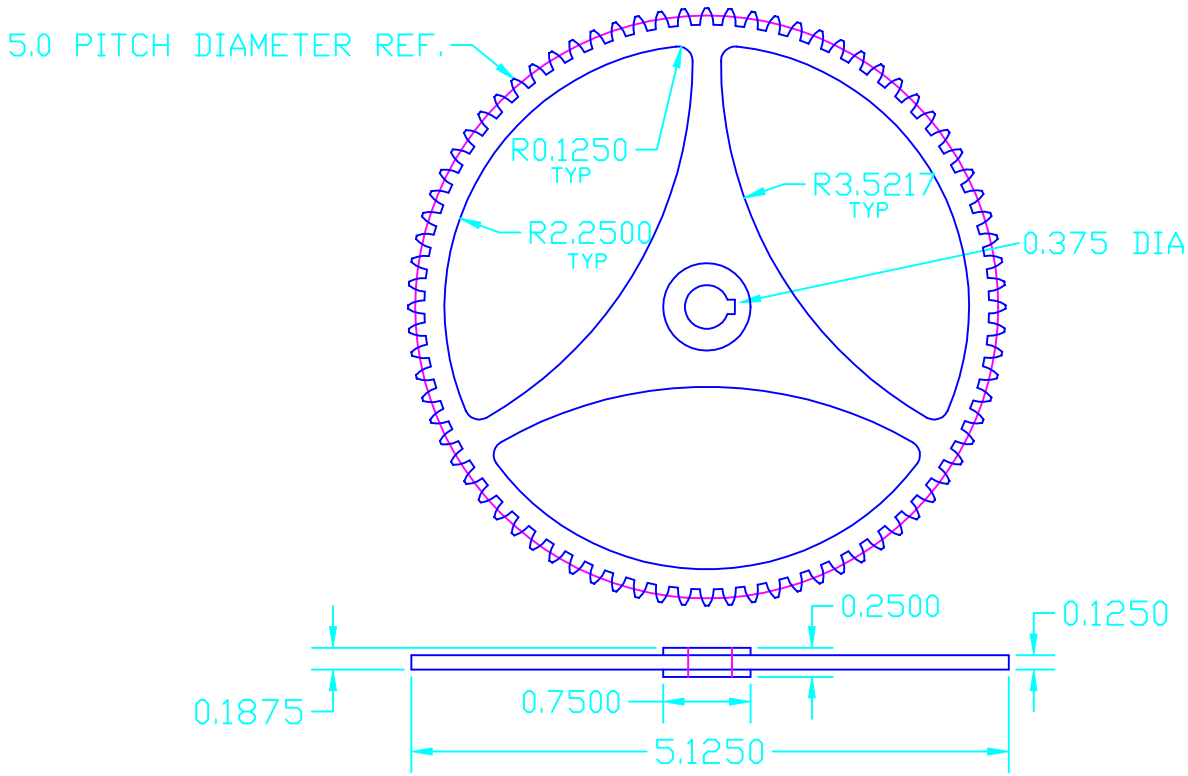

NOTE: KEYWAY NOT NECESSARILY ALIGNED WITH TOOTH

16 DIAMETRAL PITCH
20 DEGREE PRESSURE ANGLE
STD ANSI INVOLUTE SPUR GEAR

NAME: 80T_TRANS_GEAR.DWG		
SCALE: FULL	DATE: 10-28-99	PART #: 4054.1
SHEET SIZE: B	REV.: 1	
DRAWN BY: EAW/JWS		
TOLERANCE: AGMA QUALITY #10 OTHER DIMS BACKLASH CLASS C +/- 0.003	UNLESS OTHERWISE SPECIFIED	
TOLERANCE HELD AFTER PLATING	ALL DIMENSIONS ARE IN INCHES	
MATL.: BRASS/STAINLESS STEEL	QTY.: 1 OF EACH MATERIAL	
FINISH:	SHEET 1 OF 1	

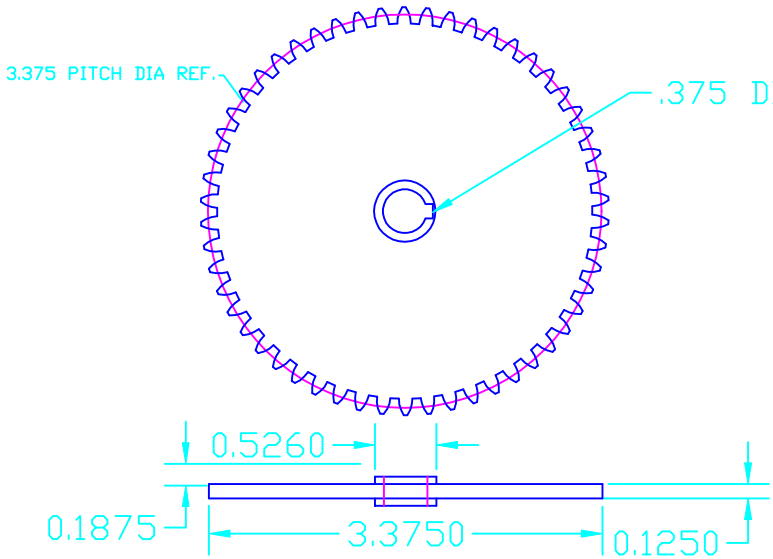

NOTE: KEYWAY NOT NECESSARILY ALIGNED WITH TOOTH

16 DIAMETRAL PITCH
20 DEGREE PRESSURE ANGLE
STD ANSI INVOLUTE SPUR GEAR

NAME: 54T_TWOHUB_GEAR.DWG		
SCALE: FULL	DATE: 10-30-98	PART #: 4258.1
SHEET SIZE: B	REV.: 1	
DRAWN BY: EAW		
TOLERANCE: AGMA QUALITY #10 OTHER DIMS BACKLASH CLASS C +/- 0.003	UNLESS OTHERWISE SPECIFIED	
TOLERANCE HELD AFTER PLATING	ALL DIMENSIONS ARE IN INCHES	
MATL.: STAINLESS STEEL	QTY.: 1	
FINISH:	SHEET 1 OF 1	

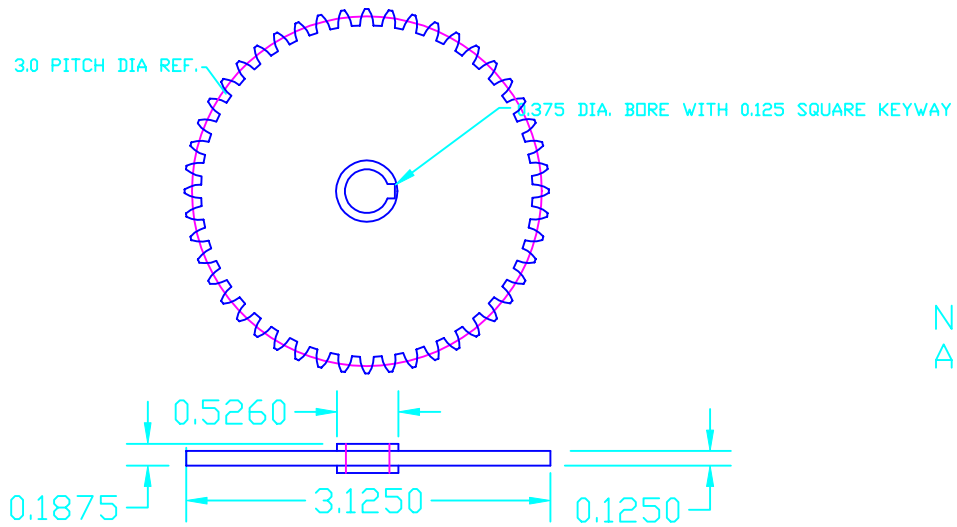

NOTE: KEYWAY NOT NECESSARILY ALIGNED WITH TOOTH

16 DIAMETRAL PITCH
20 DEGREE PRESSURE ANGLE
STD ANSI INVOLUTE SPUR GEAR

NAME: 48T_TWOHUB_GEAR.DWG		
SCALE: FULL	DATE: 8-7-98	PART #: 4262.1
SHEET SIZE: B	REV.: 1	
DRAWN BY: EAW/JWS		
TOLERANCE: AGMA QUALITY #10 OTHER DIMS BACKLASH CLASS C +/- 0.003	UNLESS OTHERWISE SPECIFIED	
TOLERANCE HELD AFTER PLATING	ALL DIMENSIONS ARE IN INCHES	
MATL.: BRASS/STAINLESS STEEL	QTY.: 3 OF EACH MATERIAL	
FINISH:	SHEET 1 OF 1	

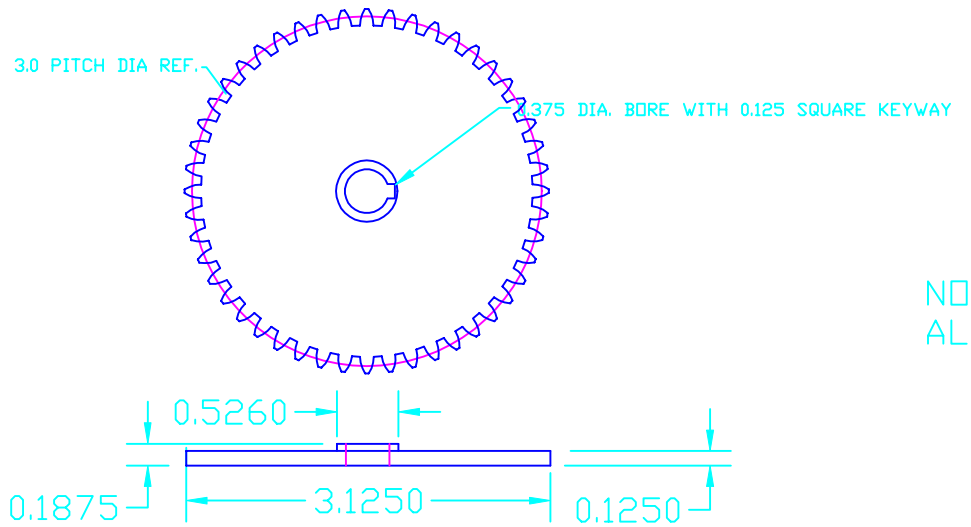

NOTE: KEYWAY NOT NECESSARILY ALIGNED WITH TOOTH

16 DIAMETRAL PITCH
20 DEGREE PRESSURE ANGLE
STD ANSI INVOLUTE SPUR GEAR

NAME: 48T_ONEHUB_GEAR.DWG		
SCALE: FULL	DATE: 8-7-98	PART #: 4263.1
SHEET SIZE: B	REV.: 1	
DRAWN BY: EAW/JWS		
TOLERANCE: AGMA QUALITY #10 BACKLASH CLASS C	OTHER DIMS +/- 0.003 UNLESS OTHERWISE SPECIFIED	
TOLERANCE HELD AFTER PLATING	ALL DIMENSIONS ARE IN INCHES	
MATL.: BRASS/STAINLESS STEEL	QTY.: 2 OF EACH MATERIAL	
FINISH:	SHEET 1 OF 1	

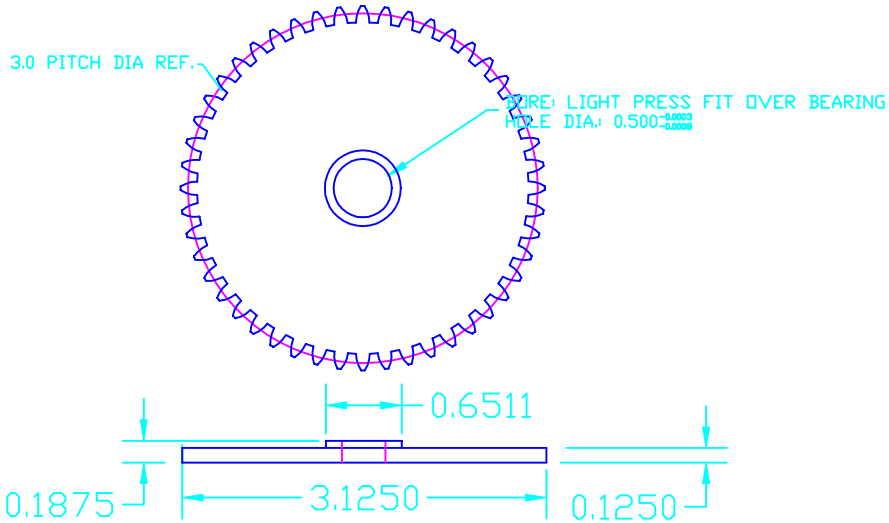

16 DIAMETRAL PITCH
20 DEGREE PRESSURE ANGLE
STD ANSI INVOLUTE SPUR GEAR

NAME: 48T_IDLER_GEAR.DWG		
SCALE: FULL	DATE: 7-15-99	PART #: 4353.1
SHEET SIZE: B	REV.: 1	
DRAWN BY: EAW/JWS		
TOLERANCE: AGMA QUALITY #10 OTHER DIMS BACKLASH CLASS C +/- 0.003	UNLESS OTHERWISE SPECIFIED	
TOLERANCE HELD AFTER PLATING	ALL DIMENSIONS ARE IN INCHES	
MATL.: STAINLESS STEEL	QTY.: 1	
FINISH: PER DANNY HILLIS	SHEET 1 OF 1	

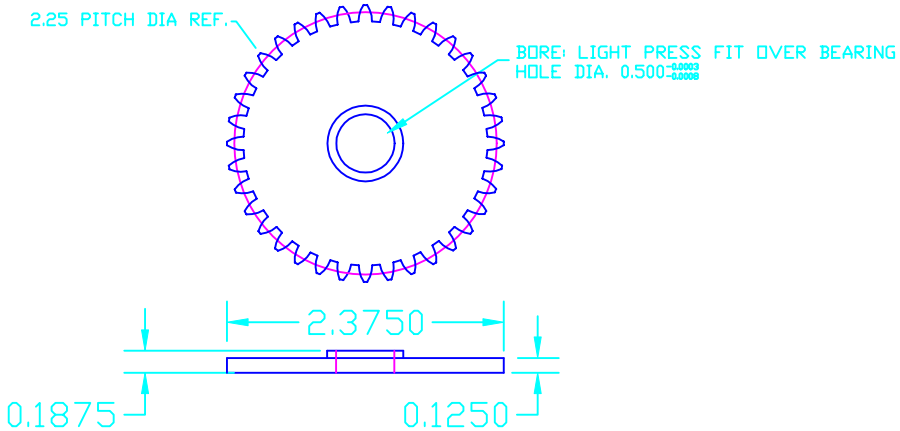

16 DIAMETRAL PITCH
20 DEGREE PRESSURE ANGLE
STD ANSI INVOLUTE SPUR GEAR

NAME: 36T_IDLER_GEAR.DWG		
SCALE: FULL	DATE: 8-7-98	PART #: 4313.1
SHEET SIZE: B	REV.: 1	
DRAWN BY: EAW/JWS		
TOLERANCE: AGMA QUALITY #10 BACKLASH CLASS C	UNLESS OTHERWISE SPECIFIED	
TOLERANCE HELD AFTER PLATING	ALL DIMENSIONS ARE IN INCHES	
MATL.: BRASS/STAINLESS STEEL	QTY.: 2 OF EACH MATERIAL	
FINISH:	SHEET 1 OF 1	

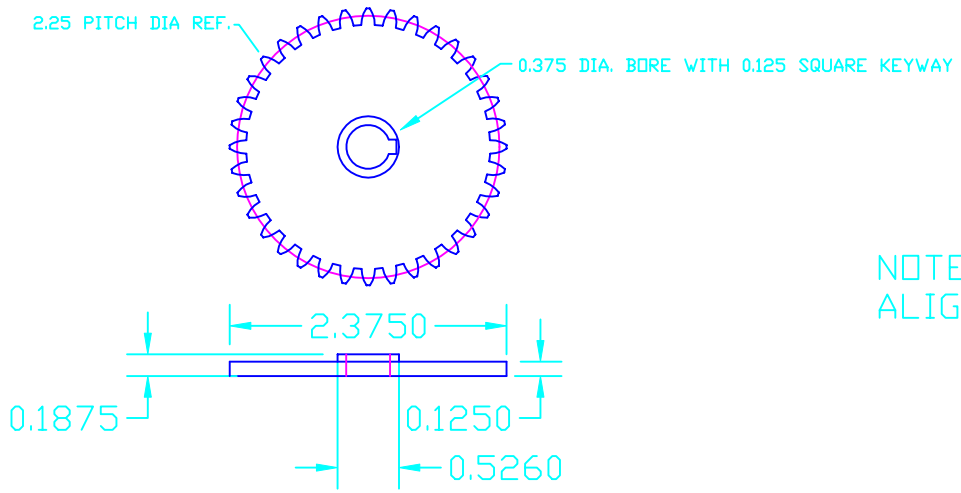

NOTE: KEYWAY NOT NECESSARILY ALIGNED WITH TOOTH

32 TOOTH
16 DIAMETRAL PITCH
20 DEGREE PRESSURE ANGLE
STD ANSI INVOLUTE SPUR GEAR
AGMA QUALITY #10, BACKLASH CLASS C
NEED 1 BRASS, 1 STAINLESS STEEL

NAME: 36T DRIVER GEAR.DWG		
SCALE: FULL	DATE: 8-7-98	PART #: 4274.1
SHEET SIZE: B	REV.: 1	
DRAWN BY: EAW/JWS		
TOLERANCE: AGMA QUALITY #10 BACKLASH CLASS C	OTHER DIMS +/- 0.003 UNLESS OTHERWISE SPECIFIED	
TOLERANCE HELD AFTER PLATING	ALL DIMENSIONS ARE IN INCHES	
MATL.: BRASS/STAINLESS STEEL	QTY.: 1 OF EACH MATERIAL	
FINISH:		SHEET 1 OF 1

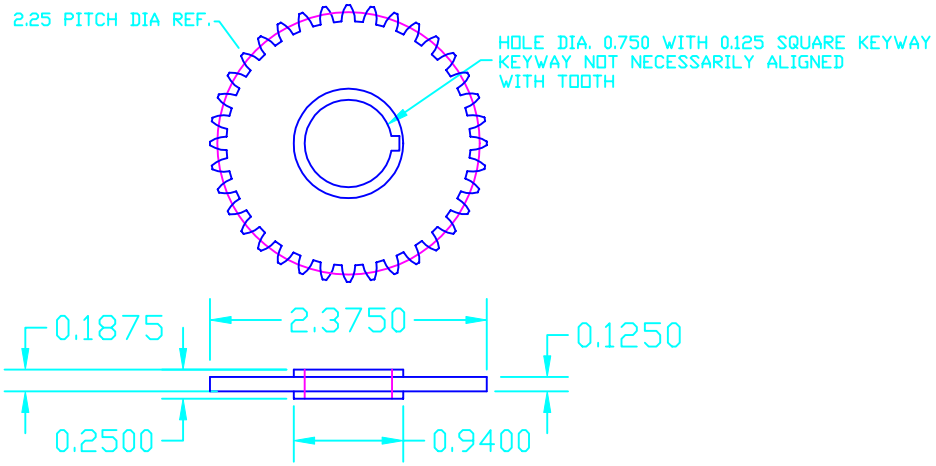

16 DIAMETRAL PITCH
20 DEGREE PRESSURE ANGLE
STD ANSI INVOLUTE SPUR GEAR

NAME: 36T_CENTER_GEAR.DWG		
SCALE: FULL	DATE: 11-2-98	PART #: 4259.1
SHEET SIZE: B	REV.: 1	
DRAWN BY: EAW/JWS		
TOLERANCE: AGMA QUALITY #10 BACKLASH CLASS C	OTHER DIMS +/- 0.003 UNLESS OTHERWISE SPECIFIED	
TOLERANCE HELD AFTER PLATING	ALL DIMENSIONS ARE IN INCHES	
MATL.: BRASS	QTY.: 1	
FINISH:	SHEET 1 OF 1	

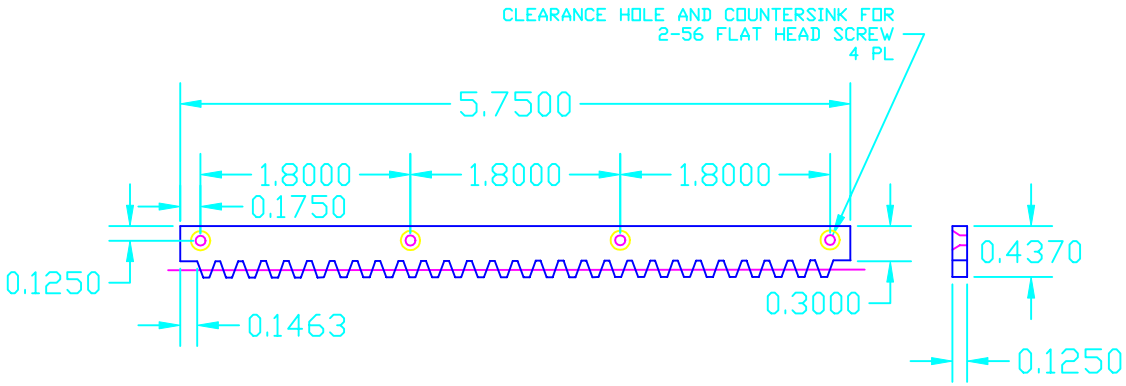

16 DIAMETRAL PITCH
20 DEGREE PRESSURE ANGLE
STD ANSI RACK

NAME: 28T_RACK_GEAR.DWG		
SCALE: FULL	DATE: 8-7-98	PART #: 4283.1
SHEET SIZE: B	REV.: 1	
DRAWN BY: EAW		
TOLERANCE: AGMA QUALITY #10 BACKLASH CLASS C	OTHER DIMS ±0.003	UNLESS OTHERWISE SPECIFIED
TOLERANCE HELD AFTER PLATING		ALL DIMENSIONS ARE IN INCHES
MATL.: STAINLESS STEEL	QTY.: 2	
FINISH:		SHEET 1 OF 1

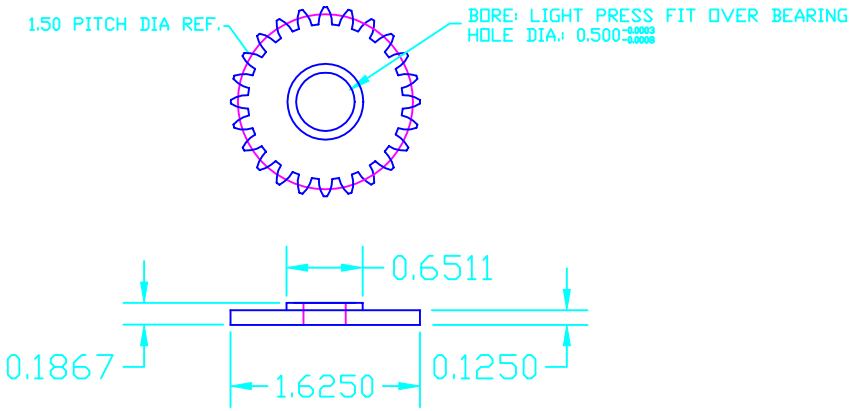

16 DIAMETRAL PITCH
20 DEGREE PRESSURE ANGLE
STD ANSI INVOLUTE SPUR GEAR

NAME: 24T_IDLER_GEAR.DWG		
SCALE: FULL	DATE: 7-15-99	PART #: 4352.1
SHEET SIZE: B	REV.: 1	
DRAWN BY: EAW/JWS		
TOLERANCE: AGMA QUALITY #10 BACKLASH CLASS C	OTHER DIMS +/- 0.003	UNLESS OTHERWISE SPECIFIED
TOLERANCE HELD AFTER PLATING		ALL DIMENSIONS ARE IN INCHES
MATL.: STAINLESS STEEL	QTY.: 3	
FINISH: PER DANNY HILLIS		SHEET 1 OF 1

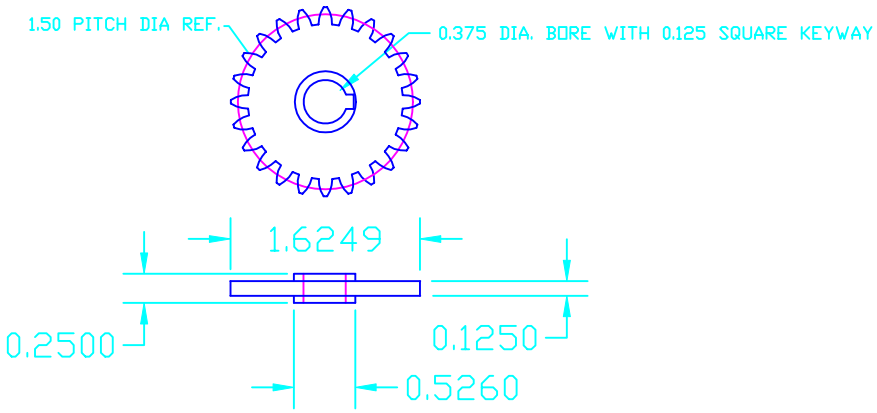

16 DIAMETRAL PITCH
20 DEGREE PRESSURE ANGLE
STD ANSI INVOLUTE SPUR GEAR

NOTE: KEYWAY NOT NECESSARILY ALIGNED WITH TOOTH

NAME: 24T_DRIVER_GEAR.DWG		
SCALE: FULL	DATE: 8-7-98	PART #: 4282.1
SHEET SIZE: B	REV.: 1	
DRAWN BY: EAW/JWS		
TOLERANCE: AGMA QUALITY #10 BACKLASH CLASS C	OTHER DIMS +/- 0.003 UNLESS OTHERWISE SPECIFIED	
TOLERANCE HELD AFTER PLATING	ALL DIMENSIONS ARE IN INCHES	
MATL.: BRASS/STAINLESS STEEL	QTY.: 3 OF EACH MATERIAL	
FINISH:		SHEET 1 OF 1

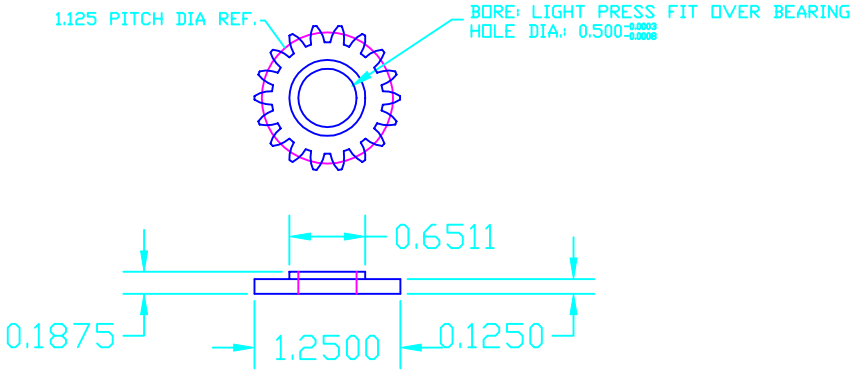

16 DIAMETRAL PITCH
20 DEGREE PRESSURE ANGLE
STD ANSI INVOLUTE SPUR GEAR

NAME: 18T_IDLER_GEAR.DWG		
SCALE: FULL	DATE: 8-6-98	PART #: 4309.1
SHEET SIZE: B	REV.: 1	
DRAWN BY: EAW/JWS		
TOLERANCE: AGMA QUALITY #10 BACKLASH CLASS C	OTHER DIMS +/- 0.003 UNLESS OTHERWISE SPECIFIED	
TOLERANCE HELD AFTER PLATING	ALL DIMENSIONS ARE IN INCHES	
MATL.: BRASS/STAINLESS STEEL	QTY.: 12 OF EACH METAL	
FINISH:		SHEET 1 OF 1

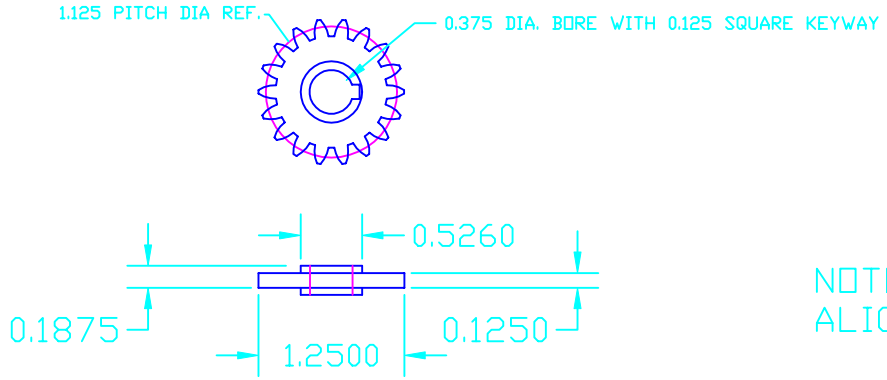

NOTE: KEYWAY NOT NECESSARILY ALIGNED WITH TOOTH

16 DIAMETRAL PITCH
20 DEGREE PRESSURE ANGLE
STD ANSI INVOLUTE SPUR GEAR

NAME: 18T_DRIVER_GEAR.DWG		
SCALE: FULL	DATE: 7-15-99	PART #: 4351.1
SHEET SIZE: B	REV.: 1	
DRAWN BY: EAW/JWS		
TOLERANCE: AGMA QUALITY #10 BACKLASH CLASS C	OTHER DIMS +/- 0.003 UNLESS OTHERWISE SPECIFIED	
TOLERANCE HELD AFTER PLATING	ALL DIMENSIONS ARE IN INCHES	
MATL.: BRASS	QTY.: 18 + 4	
FINISH: PER DANNY HILLIS		SHEET 1 OF 1

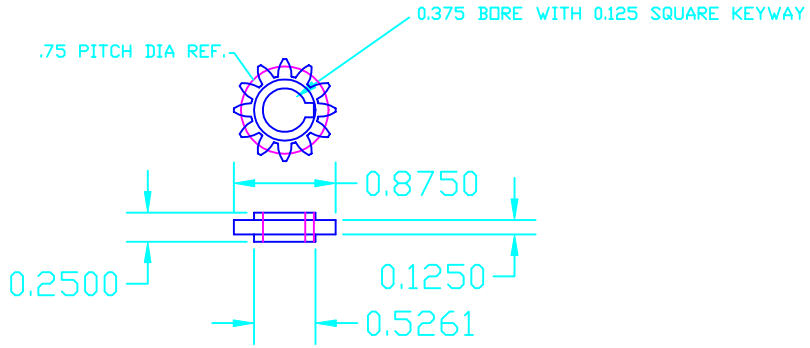

NOTE: KEYWAY NOT NECESSARILY ALIGNED WITH TOOTH

16 DIAMETRAL PITCH
20 DEGREE PRESSURE ANGLE
STD ANSI INVOLUTE SPUR GEAR

NAME: 12T_DRIVER_GEAR.DWG		
SCALE: FULL	DATE: 8-6-98	PART #: 4261.1
SHEET SIZE: B	REV.: 1	
DRAWN BY: EAW/JWS		
TOLERANCE: AGMA QUALITY #10 BACKLASH CLASS C	OTHER DIMS +/- 0.003	UNLESS OTHERWISE SPECIFIED
TOLERANCE HELD AFTER PLATING		ALL DIMENSIONS ARE IN INCHES
MATL.: BRASS/STAINLESS STEEL	QTY.: 20 IN EACH METAL	
FINISH:		SHEET 1 OF 1

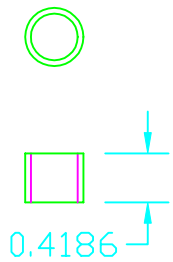

NAME: DIFFERENTIAL_SPACER.DWG		
SCALE: FULL	DATE: 2-17-99	PART #: 4312.2
SHEET SIZE: B	REV.: 2	
DRAWN BY: EAW/JWS		
TOLERANCE: ±0.003	UNLESS OTHERWISE SPECIFIED	
TOLERANCE HELD AFTER PLATING	ALL DIMENSIONS ARE IN INCHES	
MATL.: STAINLESS STEEL TUBING 1/2 O.D. X 0.049 WALL	QTY.: 1	
FINISH:	SHEET 1 OF 1	

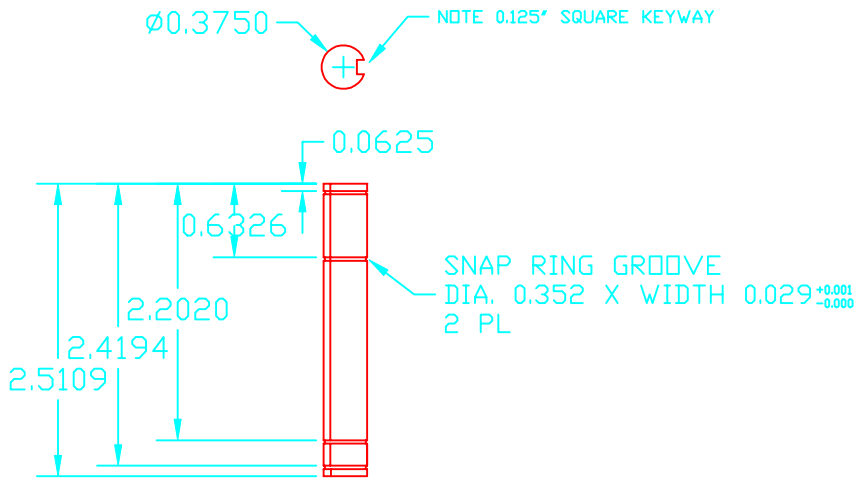

NAME: DIFFERENTIAL_SHAFT_2.DWG		
SCALE: FULL	DATE: 8-25-98	PART #: 4311.1
SHEET SIZE: B	REV.: 1	
DRAWN BY: EAW		
TOLERANCE: ±0.001	UNLESS OTHERWISE SPECIFIED	
TOLERANCE HELD AFTER PLATING	ALL DIMENSIONS ARE IN INCHES	
MATL.: COLD FINISHED OR GROUND STAINLESS STEEL BAR	QTY.: 1	
FINISH: GRIND AND CHAMFER ROD ENDS	SHEET 1 OF 1	

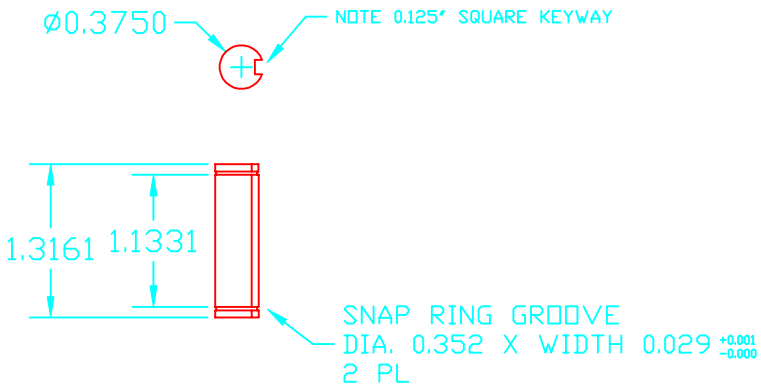

NAME: DIFFERENTIAL_SHAFT_1.DWG		
SCALE: FULL	DATE: 2-9-99	PART #: 4308.2
SHEET SIZE: B	REV.: 2	
DRAWN BY: EAW		
TOLERANCE: ±0.001	UNLESS OTHERWISE SPECIFIED	
TOLERANCE HELD AFTER PLATING	ALL DIMENSIONS ARE IN INCHES	
MATL.: COLD FINISHED OR GROUND STAINLESS STEEL BAR	QTY.: 1	
FINISH: GRIND AND CHAMFER ROD ENDS	SHEET 1 OF 1	

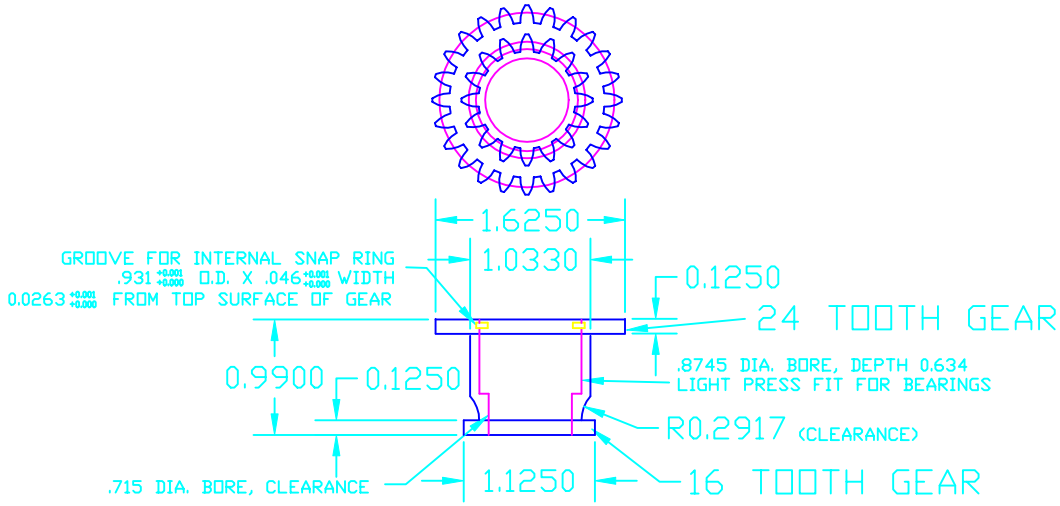

SINGLE PIECE CONSTRUCTION

24 TOOTH AND 16 TOOTH GEARS
16 DIAMETRAL PITCH
20 DEGREE PRESSURE ANGLE

STD ANSI INVOLUTE SPUR GEAR

NAME: DIFFERENTIAL PULLEY.DWG		
SCALE: FULL	DATE: 8-7-98	PART #: 4301.1
SHEET SIZE: B	REV.: 1	
DRAWN BY: EAW		
TOLERANCE: AGMA QUALITY #10 BACKLASH CLASS C	OTHER DIMS ±0.003	UNLESS OTHERWISE SPECIFIED
TOLERANCE HELD AFTER PLATING	ALL DIMENSIONS ARE IN INCHES	
MATL.: STAINLESS STEEL	QTY.: 2	
FINISH:		SHEET 1 OF 1

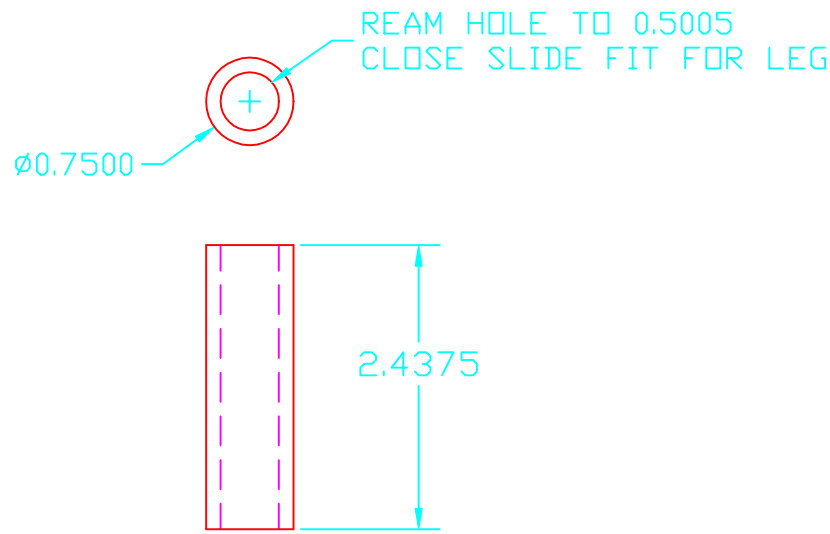

NAME: DIFFERENTIAL_LEG_SPACER.DWG		
SCALE: FULL	DATE: 9-27-99	PART #: 4419.1
SHEET SIZE: B	REV.: 1	
DRAWN BY: EAW/JWS		
TOLERANCE: ±0.003	UNLESS OTHERWISE SPECIFIED	
TOLERANCE HELD AFTER PLATING	ALL DIMENSIONS ARE IN INCHES	
MATL.: STAINLESS STEEL	QTY.: 6	
FINISH:	SHEET 1 OF 1	

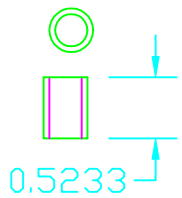

NAME: DIFF_STABILIZER.DWG		
SCALE: FULL	DATE: 3-9-99	PART #: 4339.1
SHEET SIZE: B	REV.: 1	
DRAWN BY: EAW/JWS		
TOLERANCE: ±0.003	UNLESS OTHERWISE SPECIFIED	
TOLERANCE HELD AFTER PLATING	ALL DIMENSIONS ARE IN INCHES	
MATL.: STAINLESS STEEL TUBING 3/8 O.D. X 0.049 WALL	QTY.: 2	
FINISH:	SHEET 1 OF 1	

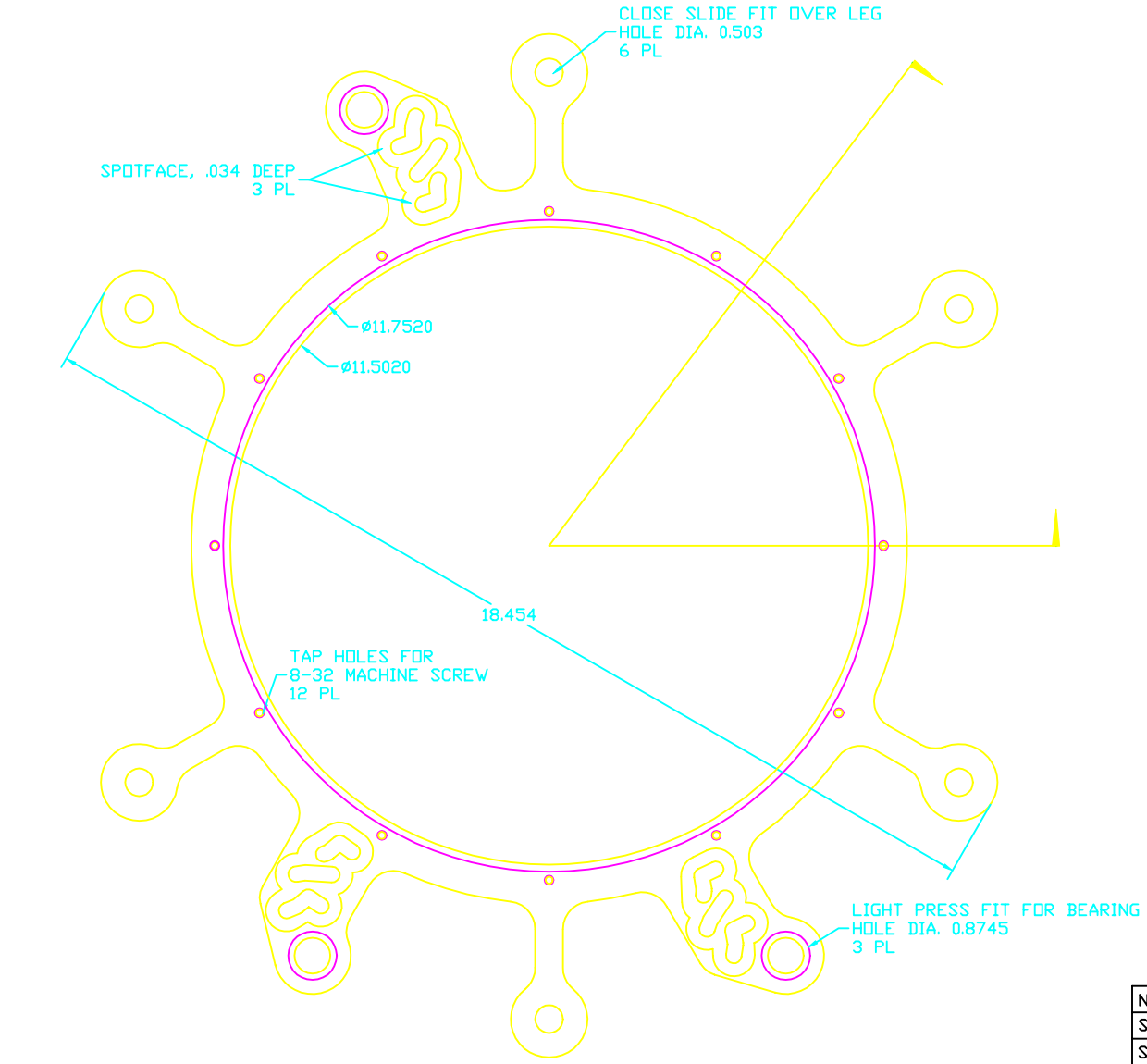

NOTE:
SOME DIMENSIONS OMITTED
DUE TO COMPLEXITY
OF DRAWING.
OVERALL DIMENSIONS GIVEN
AS REFERENCE.
DRAWING IS TO SCALE.

NAME: DIFF_GEAR_MOUNTING_PLATE.DWG		
SCALE: FULL	DATE: 7-21-99	PART #: 4297.3
SHEET SIZE: D	REV.: 3	
DRAWN BY: EAW		
TOLERANCE: ±0.005	UNLESS OTHERWISE SPECIFIED	
TOLERANCE HELD AFTER PLATING	ALL DIMENSIONS ARE IN INCHES	
MATL.: MONEL	QTY.: 1	
FINISH:	SHEET 1 OF 1	

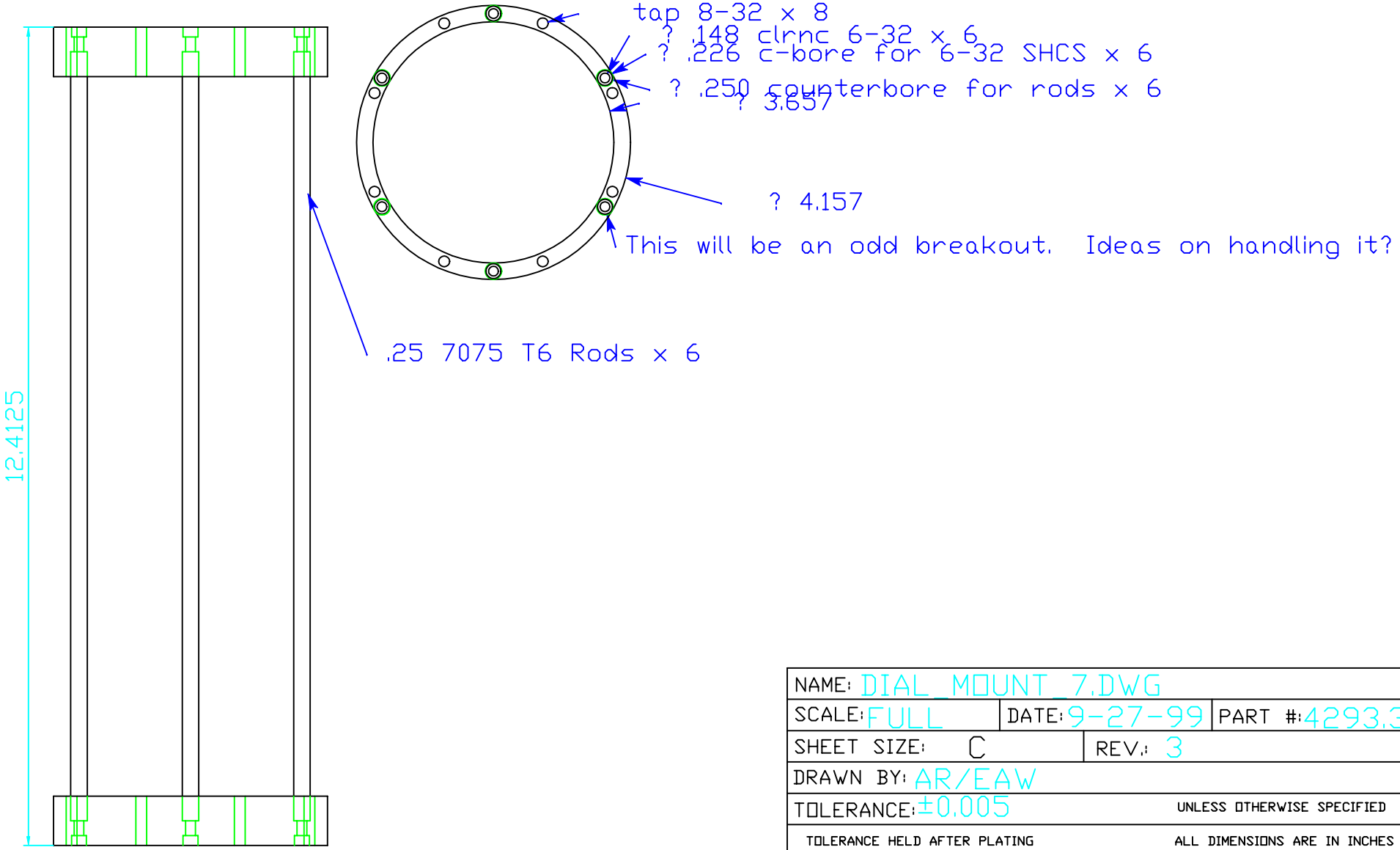

NAME: DIAL_MOUNT_7.DWG		
SCALE: FULL	DATE: 9-27-99	PART #: 4293.3
SHEET SIZE: C	REV.: 3	
DRAWN BY: AR/EAW		
TOLERANCE: ±0.005	UNLESS OTHERWISE SPECIFIED	
TOLERANCE HELD AFTER PLATING	ALL DIMENSIONS ARE IN INCHES	
MATL.: 7075 AL RODS, 6061 PLATES	QTY.: 1	
FINISH:	SHEET 1 OF 1	

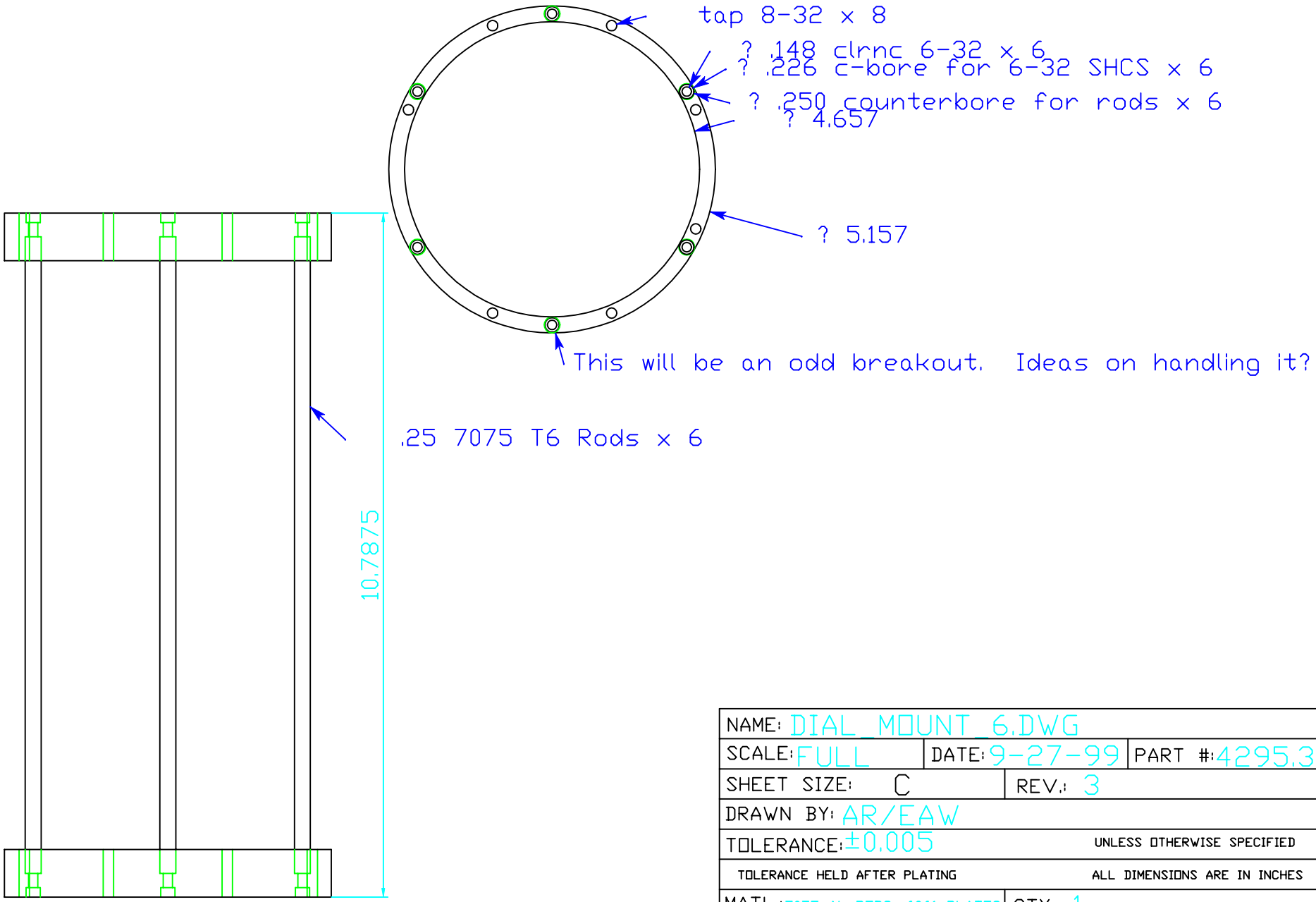

NAME: DIAL_MOUNT_6.DWG		
SCALE: FULL	DATE: 9-27-99	PART #: 4295.3
SHEET SIZE: C	REV.: 3	
DRAWN BY: AR/EAW		
TOLERANCE: ±0.005	UNLESS OTHERWISE SPECIFIED	
TOLERANCE HELD AFTER PLATING	ALL DIMENSIONS ARE IN INCHES	
MATL.: 7075 AL RODS, 6061 PLATES	QTY.: 1	
FINISH:	SHEET 1 OF 1	

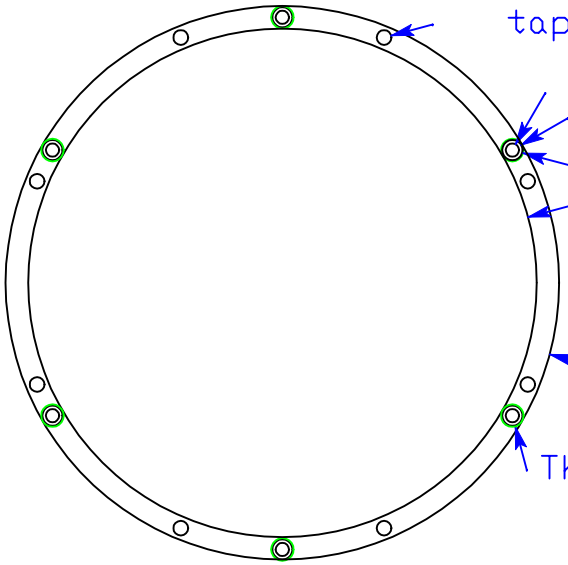

tap 8-32 x 8

? .148 clrnc 6-32 x 6

? .226 c-bore for 6-32 SHCS x 6

? .250 counterbore for rods x 6

? 5.657

? 6.157

This will be an odd breakout. Ideas on handling it?

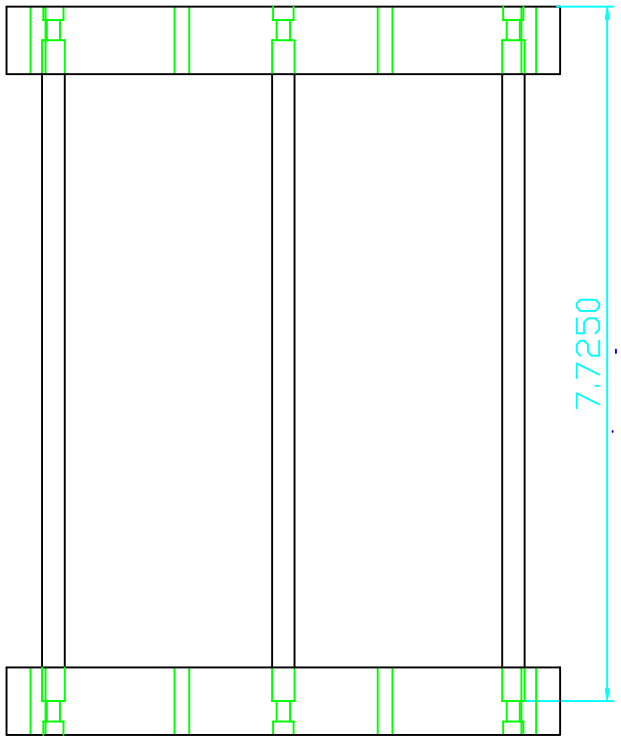

.25 7075 T6 Rods x 6

NAME: DIAL_MOUNT_5.DWG		
SCALE: FULL	DATE: 9-27-99	PART #: 4299.3
SHEET SIZE: C	REV.: 3	
DRAWN BY: AR/EAW		
TOLERANCE: ±0.005	UNLESS OTHERWISE SPECIFIED	
TOLERANCE HELD AFTER PLATING	ALL DIMENSIONS ARE IN INCHES	
MATL.: 7075 AL RODS, 6061 PLATES	QTY.: 1	
FINISH:	SHEET 1 OF 1	

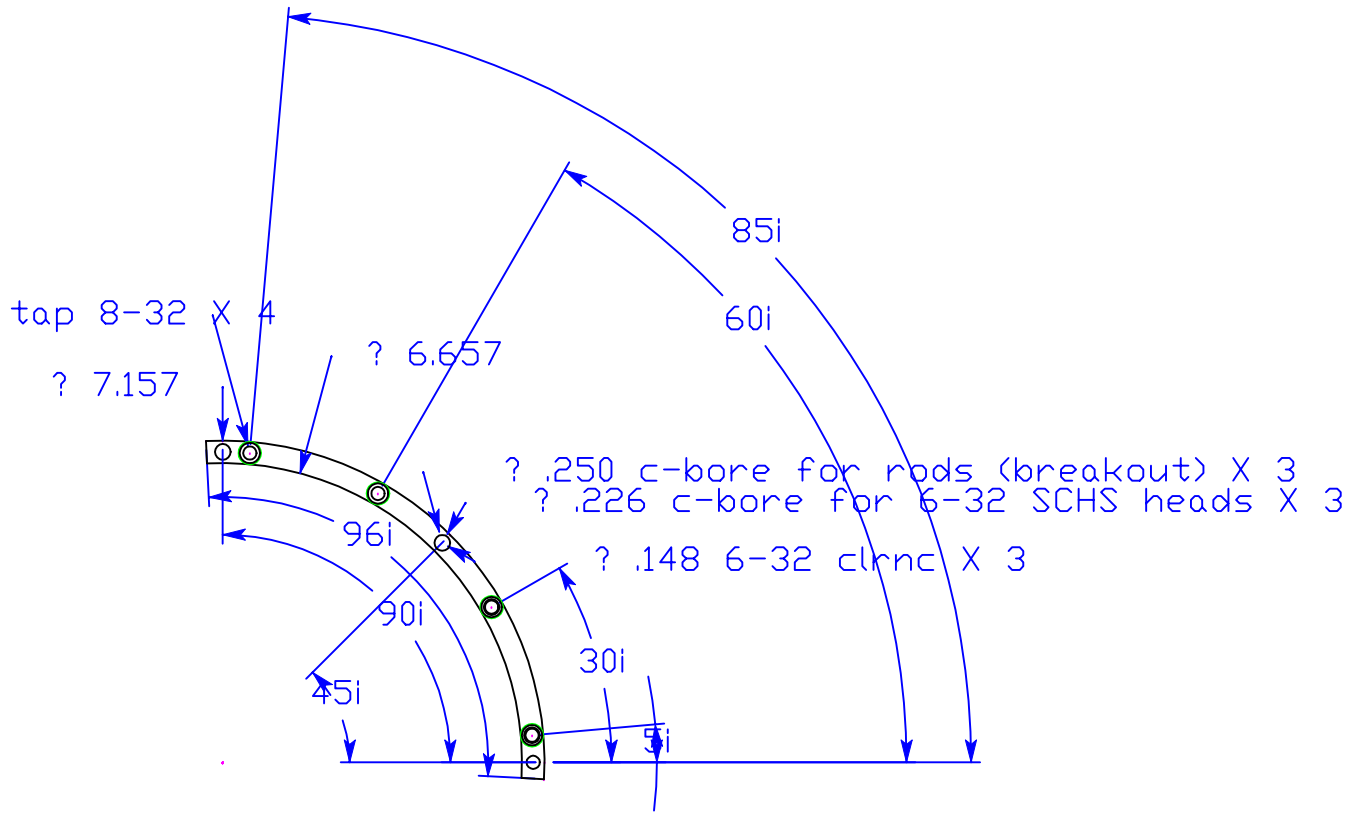

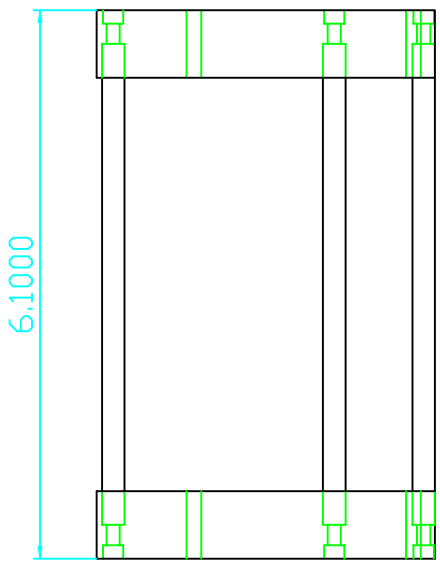

NAME: DIAL_MOUNT_4.DWG		
SCALE: FULL	DATE: 11-9-99	PART #: 4316.4
SHEET SIZE: C	REV.: 4	
DRAWN BY: AR/EAW		
TOLERANCE: ±0.005	UNLESS OTHERWISE SPECIFIED	
TOLERANCE HELD AFTER PLATING	ALL DIMENSIONS ARE IN INCHES	
MATL.: 7075 AL RODS, 6061 PLATES	QTY.: 1	
FINISH:	SHEET 1 OF 1	

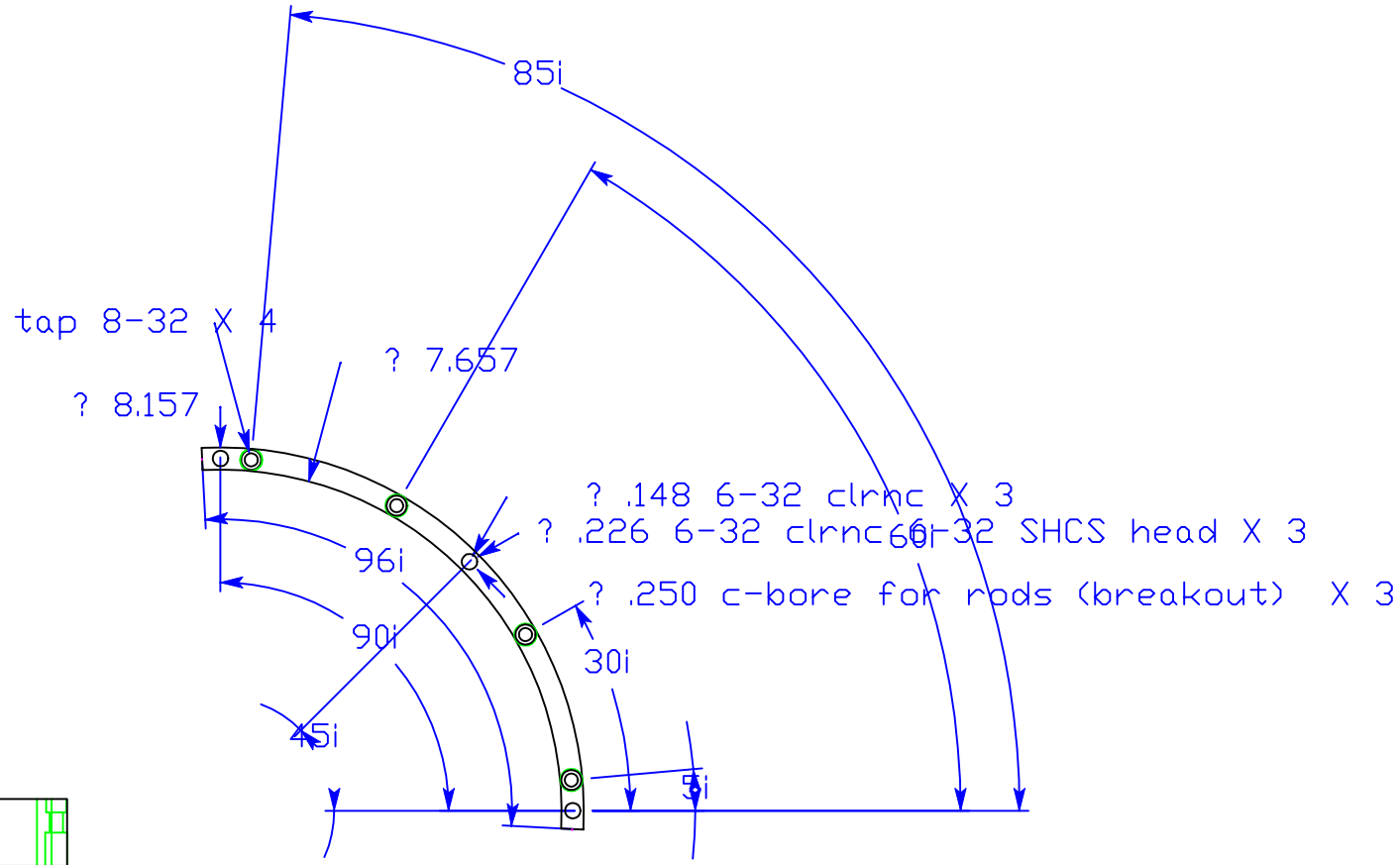

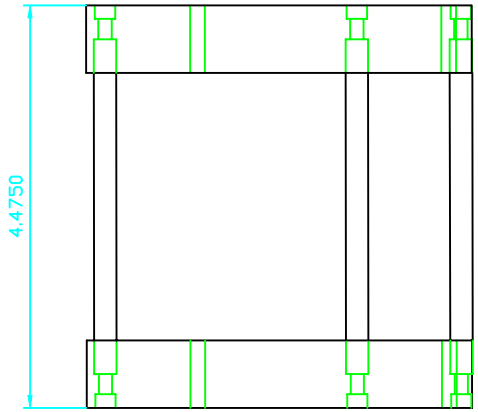

NAME: DIAL_MOUNT_3.DWG		
SCALE: FULL	DATE: 11-9-99	PART #: 4319.5
SHEET SIZE: C	REV.: 5	
DRAWN BY: AR/EAW		
TOLERANCE: ±0.005	UNLESS OTHERWISE SPECIFIED	
TOLERANCE HELD AFTER PLATING	ALL DIMENSIONS ARE IN INCHES	
MATL.: 7075 AL RODS, 6061 PLATES	QTY.: 1	
FINISH:	SHEET 1 OF 1	

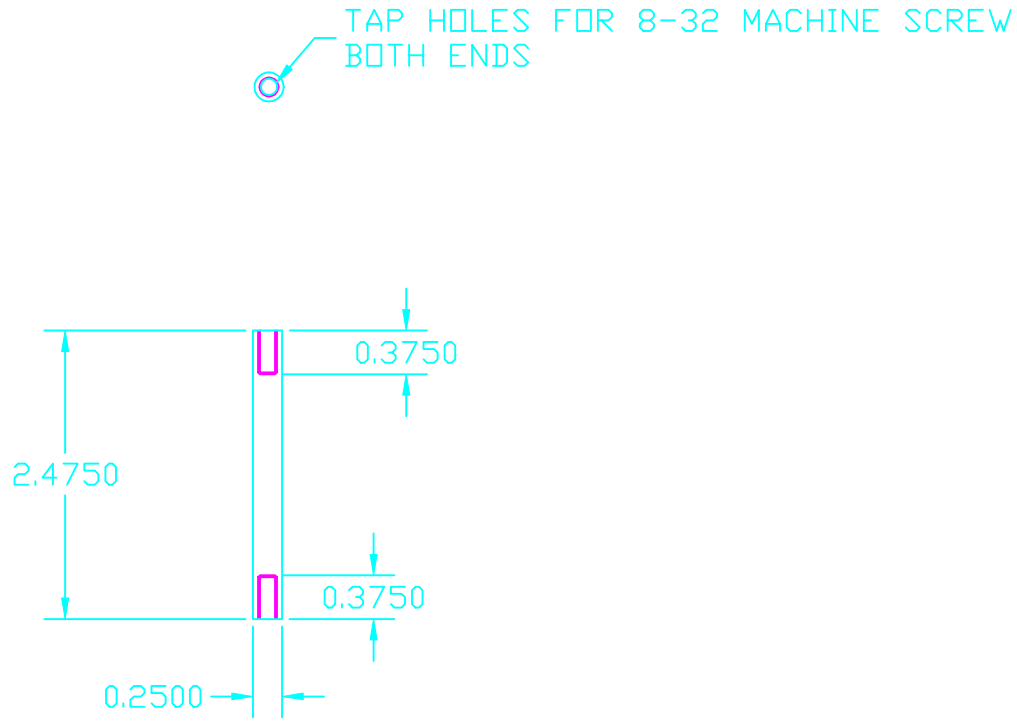

NAME: DIAL_MOUNT_2.DWG		
SCALE: FULL	DATE: 9-27-99	PART #: 4321.3
SHEET SIZE: B	REV.: 3	
DRAWN BY: EAW/JWS		
TOLERANCE: ±0.001	UNLESS OTHERWISE SPECIFIED	
TOLERANCE HELD AFTER PLATING	ALL DIMENSIONS ARE IN INCHES	
MATL.: STAINLESS STEEL	QTY.: 8	
FINISH:	SHEET 1 OF 1	

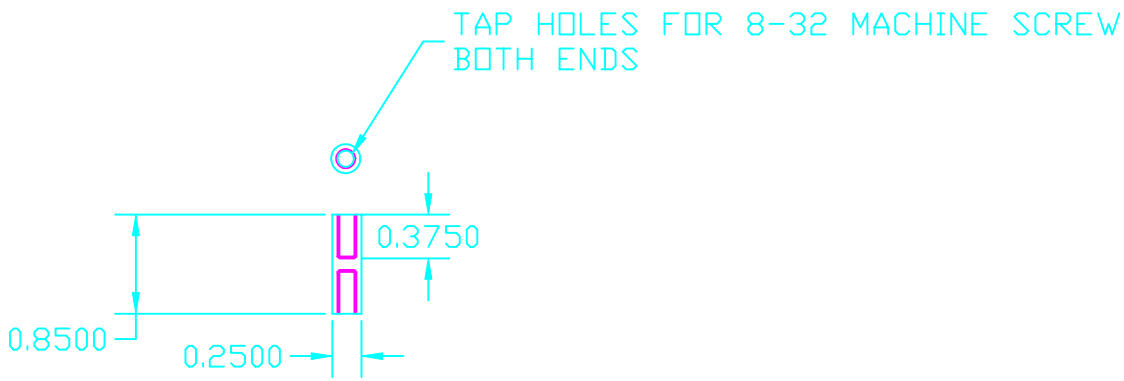

NAME: DIAL_MOUNT_1.DWG		
SCALE: FULL	DATE: 9-27-99	PART #: 4334.2
SHEET SIZE: B	REV.: 2	
DRAWN BY: EAW/JWS		
TOLERANCE: ±0.001	UNLESS OTHERWISE SPECIFIED	
TOLERANCE HELD AFTER PLATING	ALL DIMENSIONS ARE IN INCHES	
MATL.: STAINLESS STEEL	QTY.: 8	
FINISH:	SHEET 1 OF 1	

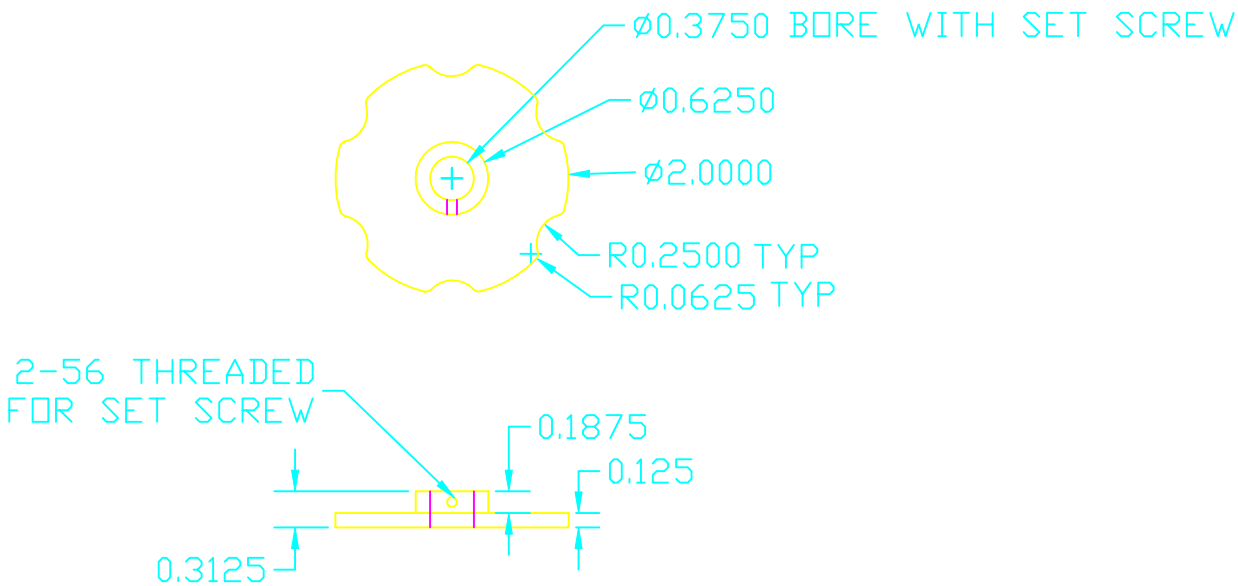

NAME: DETENT_WHEEL.DWG		
SCALE: FULL	DATE: 2-7-00	PART #: 4061.1
SHEET SIZE: B	REV.: 1	
DRAWN BY: EAW		
TOLERANCE: ±0.005	UNLESS OTHERWISE SPECIFIED	
TOLERANCE HELD AFTER PLATING	ALL DIMENSIONS ARE IN INCHES	
MATL.: 360 BRASS	QTY.: 5	
FINISH: DEBURR EDGES		SHEET 1 OF 1

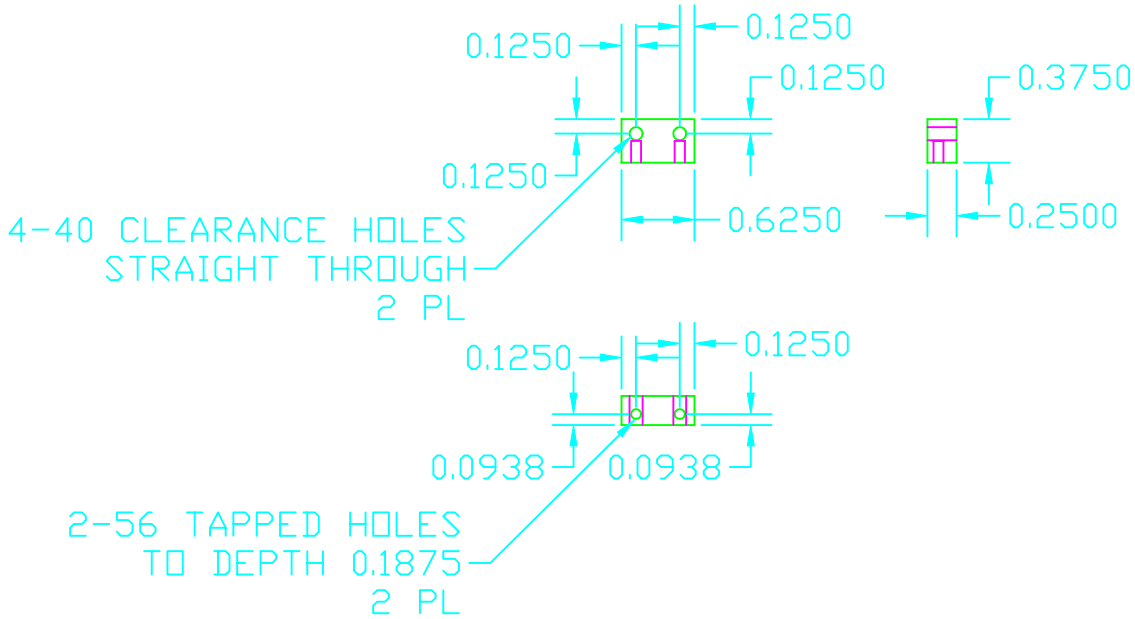

NAME: DETENT_SUPPORT_BLOCK.DWG		
SCALE: FULL	DATE: 2-7-00	PART #: 4064.1
SHEET SIZE: B	REV.: 1	
DRAWN BY: EAW		
TOLERANCE: ±0.005	UNLESS OTHERWISE SPECIFIED	
TOLERANCE HELD AFTER PLATING	ALL DIMENSIONS ARE IN INCHES	
MATL.: MONEL OR STAINLESS STEEL	QTY.: 5	
FINISH: DEBURR EDGES		SHEET 1 OF 1

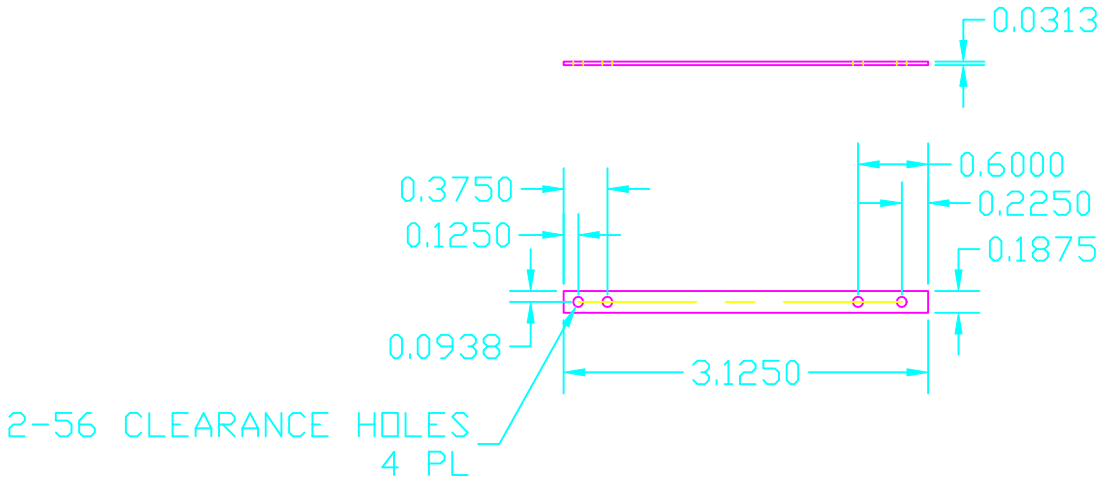

NAME: DETENT_SPRING.DWG		
SCALE: FULL	DATE: 2-7-00	PART #: 4063.1
SHEET SIZE: B	REV.: 1	
DRAWN BY: EAW		
TOLERANCE: ±0.005	UNLESS OTHERWISE SPECIFIED	
TOLERANCE HELD AFTER PLATING	ALL DIMENSIONS ARE IN INCHES	
MATL.: SPRING STEEL	QTY.: 20	
FINISH:		SHEET 1 OF 1

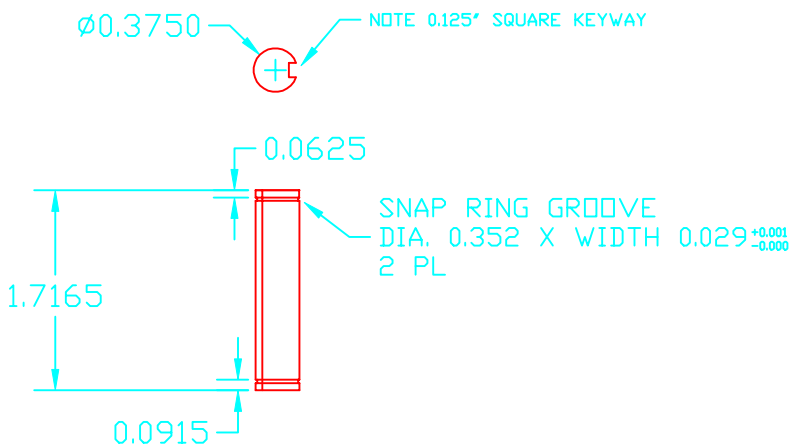

NAME: GEAR_SHAFT_7.DWG		
SCALE: FULL	DATE: 9-28-99	PART #: 4457.1
SHEET SIZE: B	REV.: 1	
DRAWN BY: EAW		
TOLERANCE: ±0.001	UNLESS OTHERWISE SPECIFIED	
TOLERANCE HELD AFTER PLATING	ALL DIMENSIONS ARE IN INCHES	
MATL.: COLD FINISHED OR GROUND STAINLESS STEEL BAR	QTY.: 1	
FINISH: GRIND AND CHAMFER ROD ENDS	SHEET 1 OF 1	

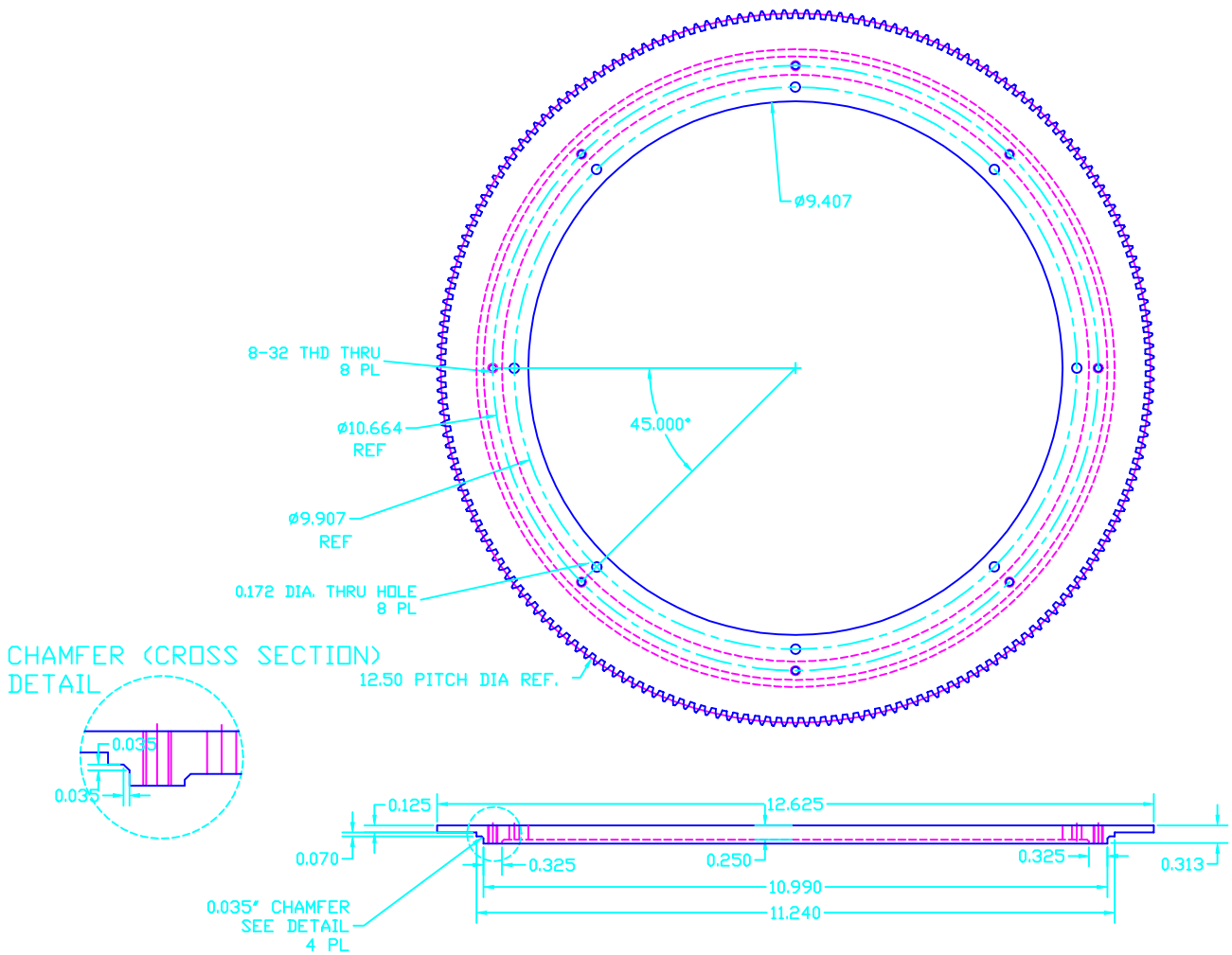

16 DIAMETRAL PITCH
20 DEGREE PRESSURE ANGLE
STD ANSI INVOLUTE SPUR GEAR

NAME: GEAR1.DWG (200 TOOTH GEAR -- YEAR)		
SCALE: FULL	DATE: 7-19-99	PART #: 4331.5
SHEET SIZE: D	REV.: 5	
DRAWN BY: JWS/EAW		
TOLERANCE: AGMA QUALITY #10 BACKLASH CLASS C	OTHER DIMS +/- 0.003	UNLESS OTHERWISE SPECIFIED
TOLERANCE HELD AFTER PLATING		ALL DIMENSIONS ARE IN INCHES
MATL.: BRASS	QTY.: 1	
FINISH: PER DANNY HILLIS		SHEET 1 OF 1

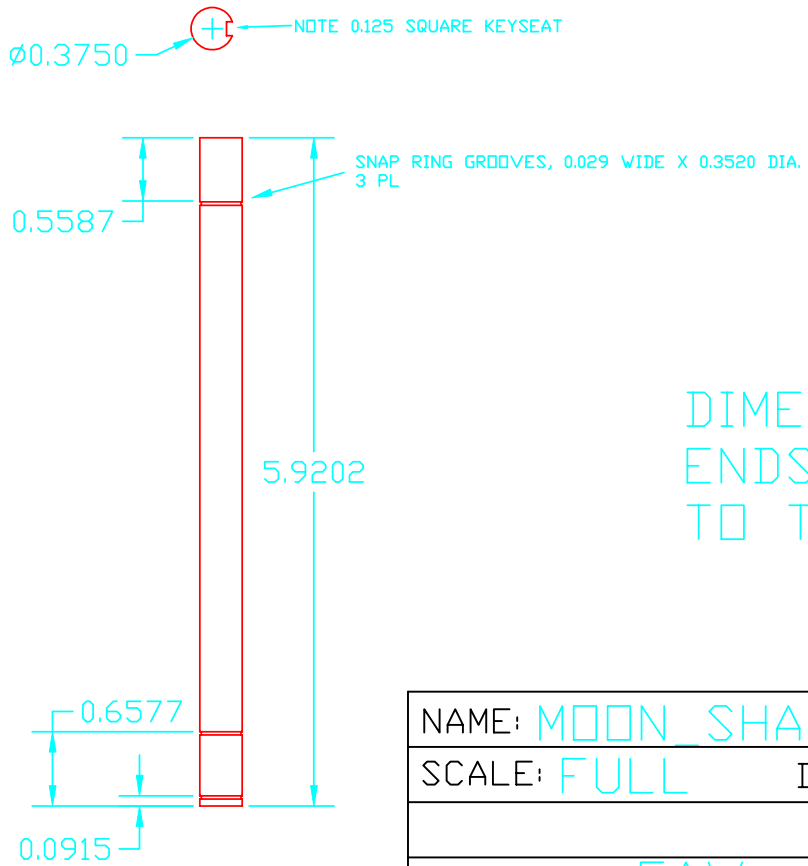

DIMENSIONS ARE FROM
ENDS OF SHAFT
TO TOP OF GROOVES

NAME: MOON_SHAFT_2.DWG		
SCALE: FULL	DATE: 9-24-99	4049.2
	2	
EAW		
±0.001		
		IONS ARE IN INCHES
STAINLESS STEEL BAR COLD FINISHED OR GROUND	1	
	1	1

Xref D:\Liz's Stuff\Proj-

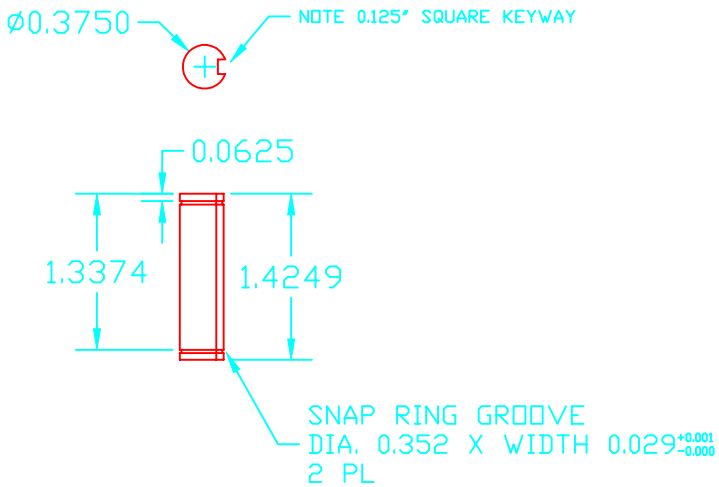

NAME: MOON _SHAFT_1.DWG		
SCALE: FULL	DATE: 9-24-99	PART #: 4048.2
SHEET SIZE: B	REV.: 2	
DRAWN BY: EAW		
TOLERANCE: ±0.001	UNLESS OTHERWISE SPECIFIED	
TOLERANCE HELD AFTER PLATING	ALL DIMENSIONS ARE IN INCHES	
MATL.: COLD FINISHED OR GROUND STAINLESS STEEL BAR	QTY.: 1	
FINISH: GRIND AND CHAMFER ROD ENDS	SHEET 1 OF 1	

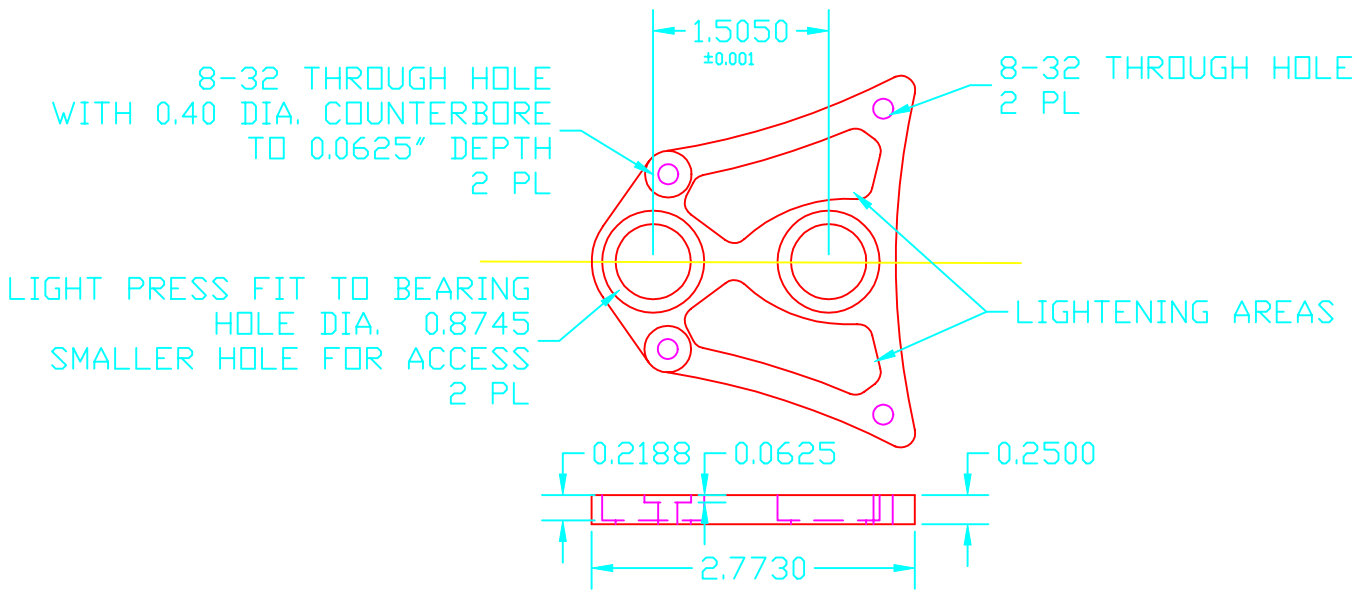

NAME: MOON_PLATE_TOP.DWG		
SCALE: FULL	DATE: 5-4-99	PART #: 4045.1
SHEET SIZE: B	REV.: 1	
DRAWN BY: EAW		
TOLERANCE: ±0.005	UNLESS OTHERWISE SPECIFIED	
TOLERANCE HELD AFTER PLATING	ALL DIMENSIONS ARE IN INCHES	
MATL.: MONEL	QTY.: 1	
FINISH:		SHEET 1 OF 1

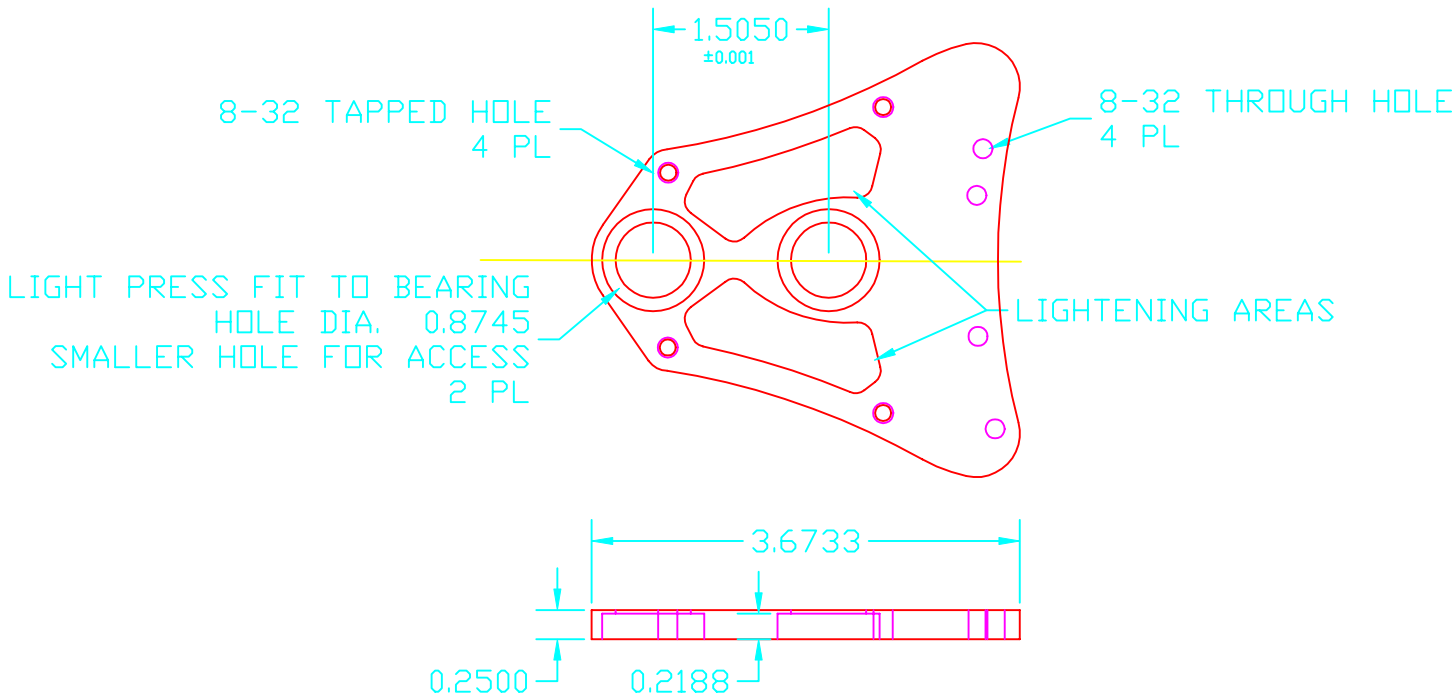

NAME: MOON_PLATE_BOTTOM.DWG		
SCALE: FULL	DATE: 9-24-99	PART #: 4046.2
SHEET SIZE: B	REV.: 2	
DRAWN BY: EAW		
TOLERANCE: ±0.005	UNLESS OTHERWISE SPECIFIED	
TOLERANCE HELD AFTER PLATING	ALL DIMENSIONS ARE IN INCHES	
MATL.: MONEL	QTY.: 1	
FINISH:	SHEET 1 OF 1	

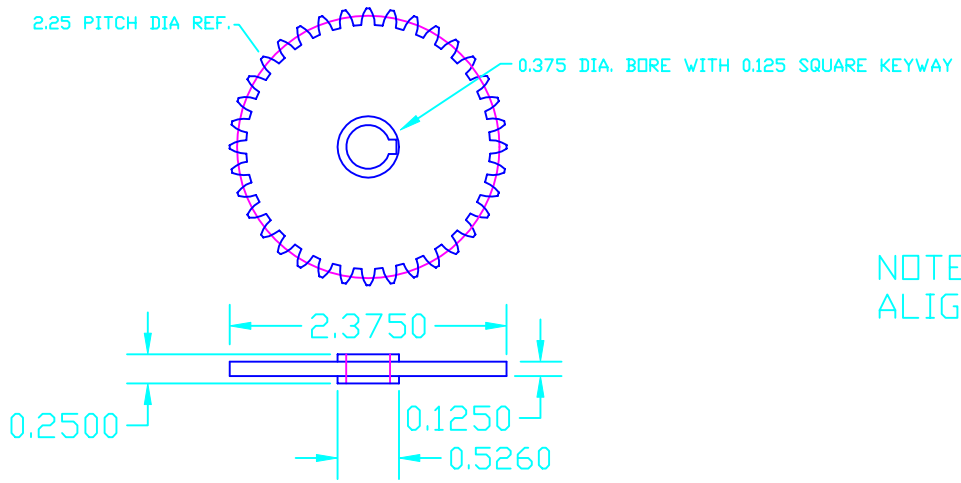

NOTE: KEYWAY NOT NECESSARILY ALIGNED WITH TOOTH

32 TOOTH
16 DIAMETRAL PITCH
20 DEGREE PRESSURE ANGLE
STD ANSI INVOLUTE SPUR GEAR
AGMA QUALITY #10, BACKLASH CLASS C
NEED 1 BRASS, 1 STAINLESS STEEL

NAME: MOON_GEAR_36T.DWG		
SCALE: FULL	DATE: 5-11-99	PART #: 4051.1
SHEET SIZE: B	REV.: 1	
DRAWN BY: EAW/JWS		
TOLERANCE: AGMA QUALITY #10 BACKLASH CLASS C	OTHER DIMS +/- 0.003 UNLESS OTHERWISE SPECIFIED	
TOLERANCE HELD AFTER PLATING	ALL DIMENSIONS ARE IN INCHES	
MATL.: BRASS	QTY.: 2	
FINISH:		SHEET 1 OF 1

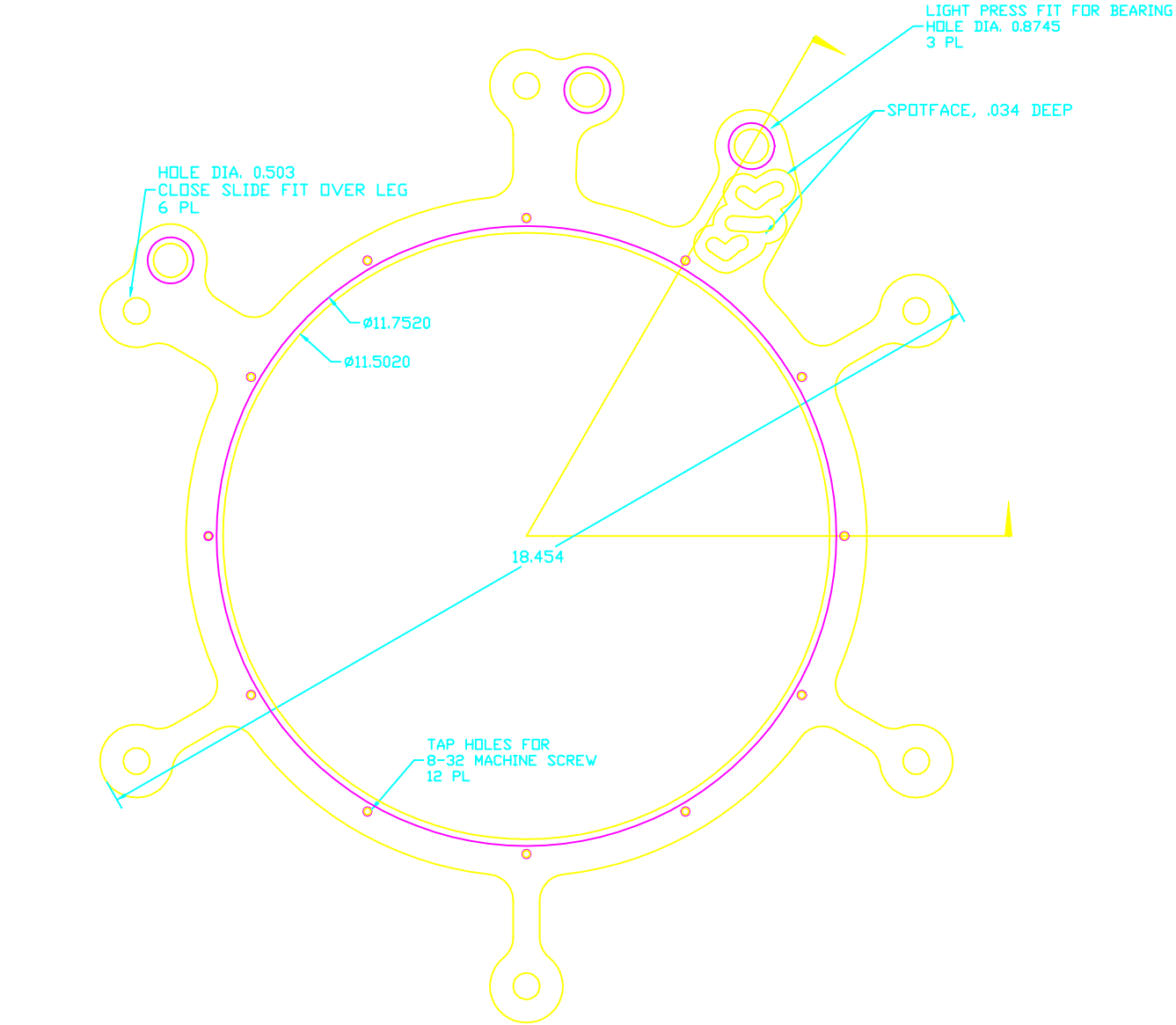

NOTE:
SOME DIMENSIONS OMITTED
DUE TO COMPLEXITY OF DRAWING.
OVERALL DIMENSIONS GIVEN
AS REFERENCE.
DRAWING IS TO SCALE.

NAME: LPYEAR_GEAR_MOUNT_PLATE.DWG		
SCALE: FULL	DATE: 4-6-99	PART #: 4333.2
SHEET SIZE: D	REV.: 2	
DRAWN BY: EAW/JWS		
TOLERANCE: ±0.005	UNLESS OTHERWISE SPECIFIED	
TOLERANCE HELD AFTER PLATING	ALL DIMENSIONS ARE IN INCHES	
MATL.: MONEL	QTY.: 1	
FINISH:	SHEET 1 OF 1	

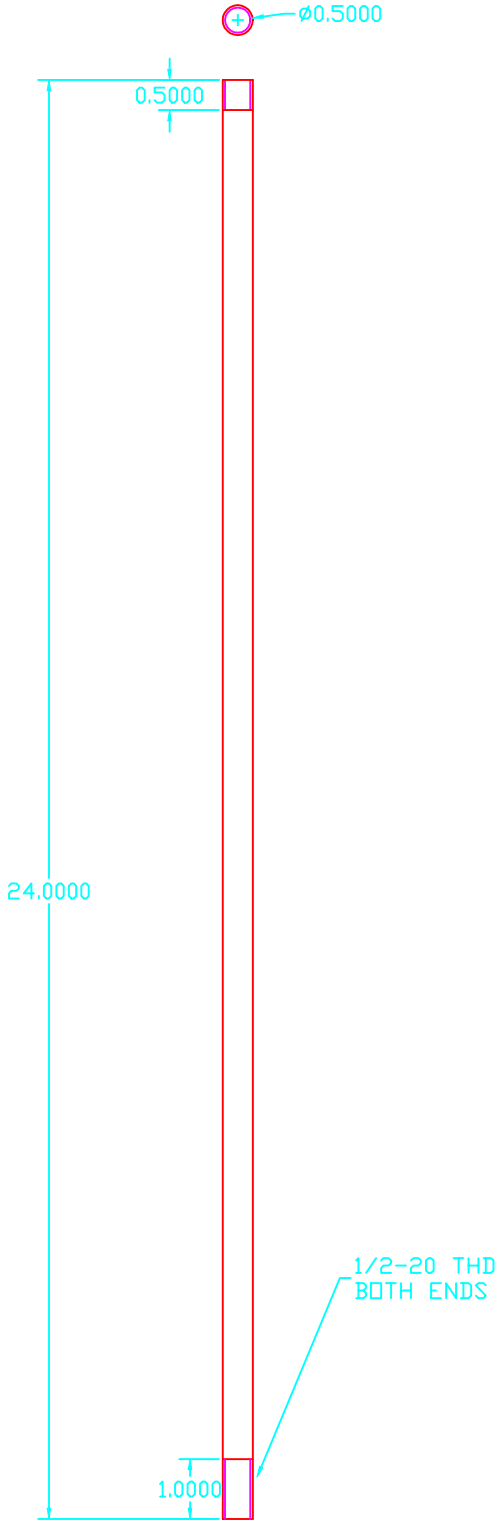

NAME:	LOWER_LEG_2.DWG
SCALE:	FULL
DATE:	9-27-99
PART #:	4002.1
SHEET SIZE:	D
REV.:	1
DRAWN BY:	EAW
TOLERANCE:	±0.001
UNLESS OTHERWISE SPECIFIED	
TOLERANCE HELD AFTER PLATING	
ALL DIMENSIONS ARE IN INCHES	
MATL.:	STAINLESS STEEL BAR
QTY.:	2
FINISH:	COLD FINISHED OR GROUND
SHEET 1 OF 1	

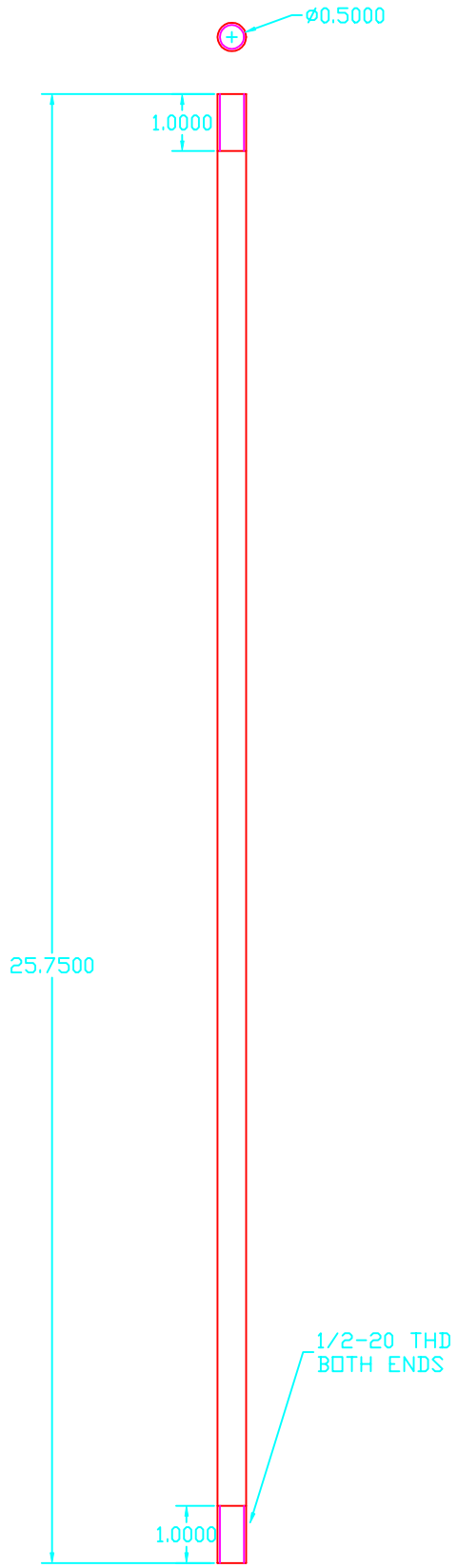

NAME: LOWER_LEG_1.DWG			
SCALE: FULL	DATE: 9-27-99	PART #: 4001.1	
SHEET SIZE: D	REV.: 1		
DRAWN BY: EAW			
TOLERANCE: ±0.001	UNLESS OTHERWISE SPECIFIED		
TOLERANCE HELD AFTER PLATING	ALL DIMENSIONS ARE IN INCHES		
MATL.: STAINLESS STEEL BAR COLD FINISHED OR GROUND	QTY.: 4		
FINISH:	SHEET 1 OF 1		

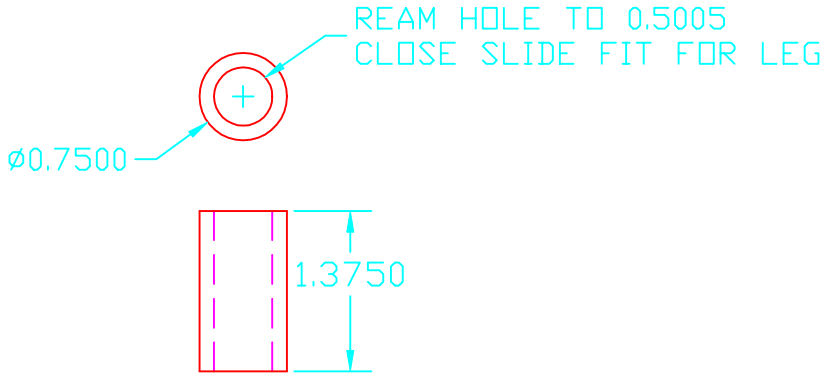

NAME: LOWER_CAM_LEG_SPACER.DWG		
SCALE: FULL	DATE: 8-27-99	PART #: 4296.1
SHEET SIZE: B	REV.: 1	
DRAWN BY: EAW/JWS		
TOLERANCE: ±0.003	UNLESS OTHERWISE SPECIFIED	
TOLERANCE HELD AFTER PLATING	ALL DIMENSIONS ARE IN INCHES	
MATL.: STAINLESS STEEL	QTY.: 6	
FINISH:	SHEET 1 OF 1	

LOCKWHEEL #4024.1

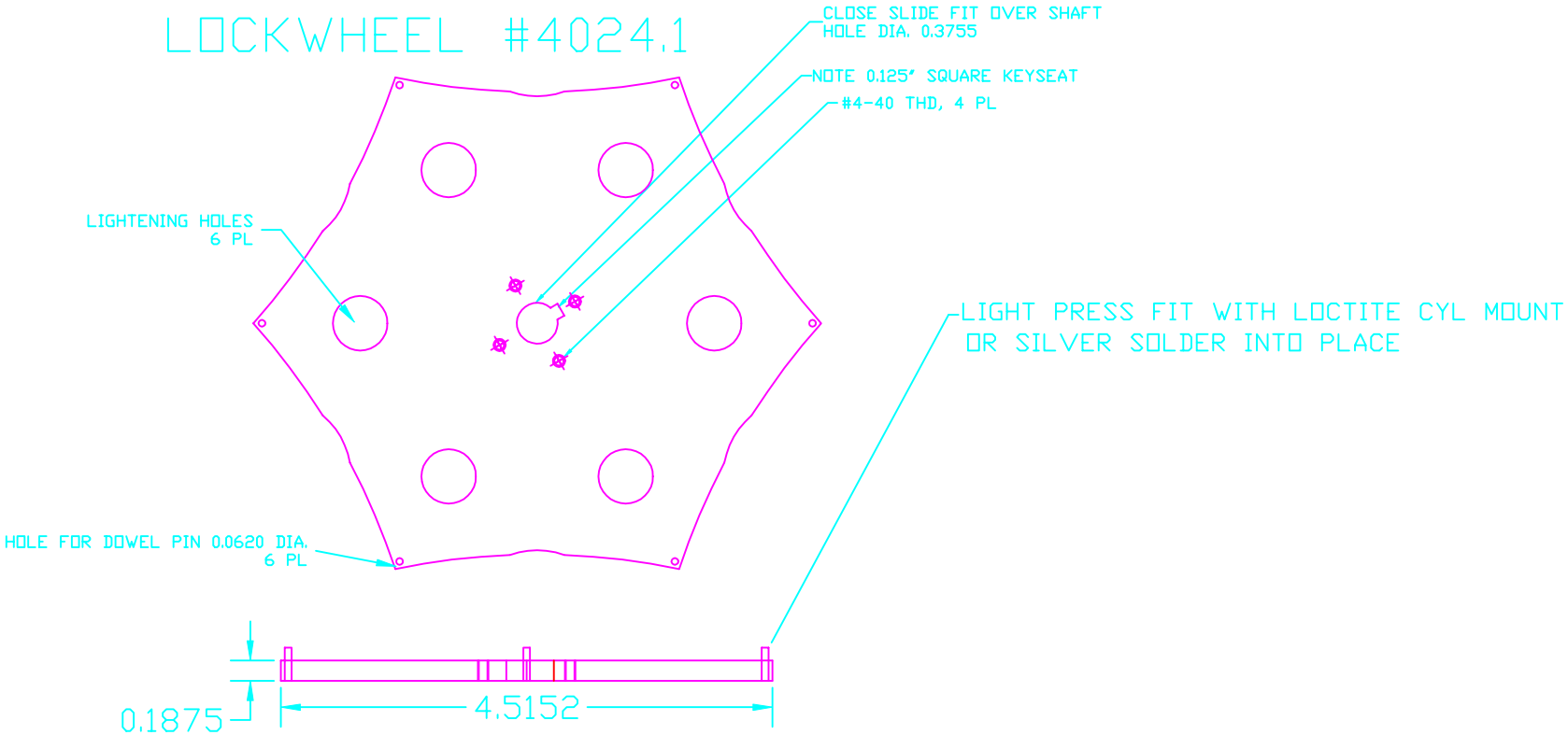

LOCKWHEEL PIN #4025.1

USE MCMASTER CARR 90145A416 DOWEL

NAME: LOCKWHEEL.DWG		
SCALE: FULL	DATE: 7-6-98	PART #: 4024.1,4025.1
SHEET SIZE: B	REV.: 1	
DRAWN BY: EAW/JWS		
TOLERANCE: ±0.005	UNLESS OTHERWISE SPECIFIED	
TOLERANCE HELD AFTER PLATING	ALL DIMENSIONS ARE IN INCHES	
MATL.: 360 BRASS	QTY.: 5	
FINISH:	SHEET 1 OF 1	

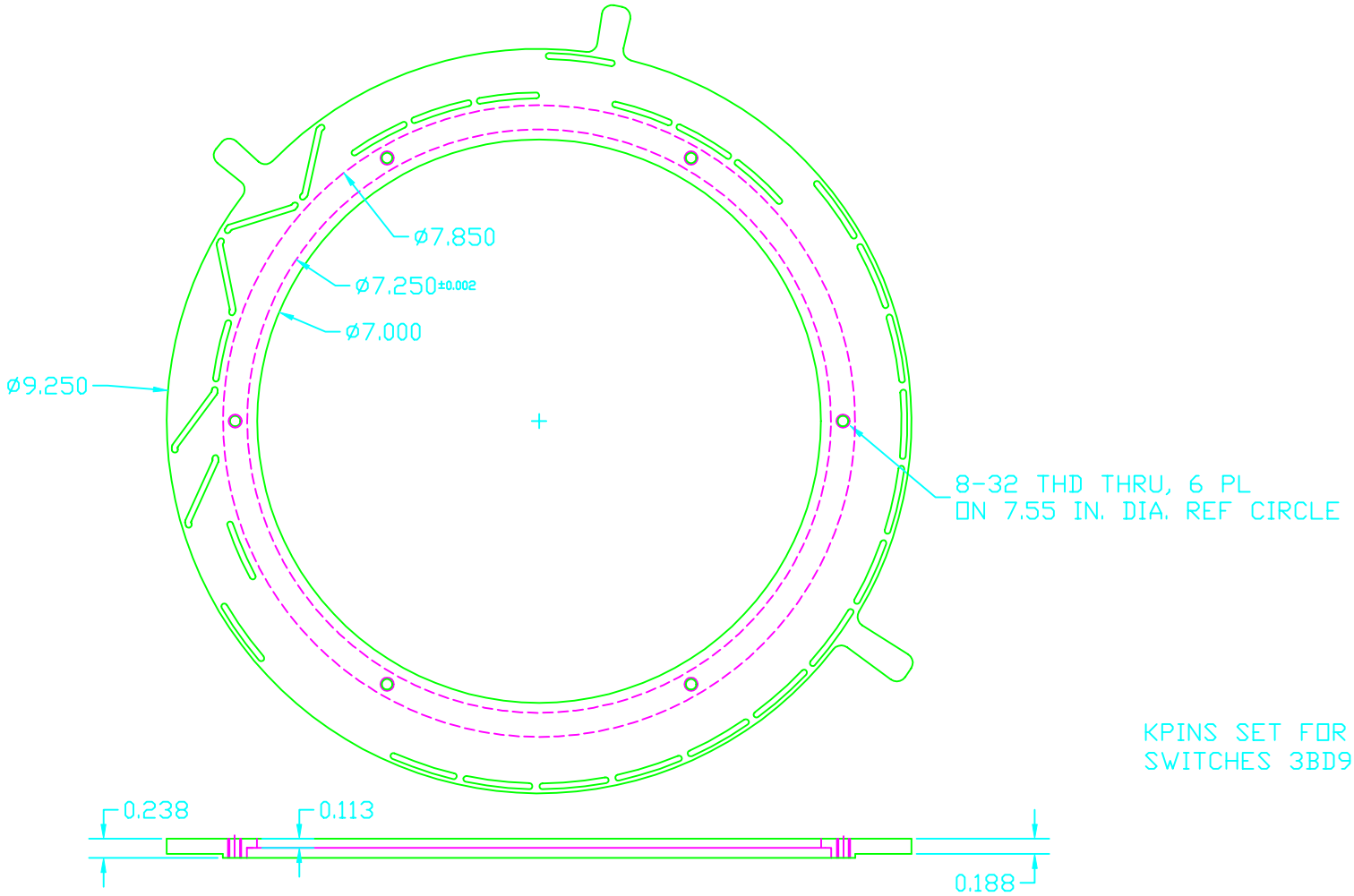

KPINS SET FOR ONE HOUR INTERVAL.
SWITCHES 3BD9 TO 3BAF (HEX)

NOTE:
DIMENSIONS OMITTED DUE TO
COMPLEXITY OF DRAWING.
OUTER AND INNER DIAMETERS
GIVEN AS REFERENCE.
DRAWING IS TO SCALE.

NAME: KPINRING.DWG		
SCALE: FULL	DATE: 4-19-99	PART #: 4007.5
SHEET SIZE: C	REV.: 5	
DRAWN BY: EAW/JWS		
TOLERANCE: ±0.005	UNLESS OTHERWISE SPECIFIED	
TOLERANCE HELD AFTER PLATING	ALL DIMENSIONS ARE IN INCHES	
MATL.: BRASS	QTY.: 1	
FINISH:	SHEET 1 OF 1	

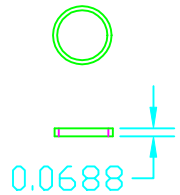

NAME: KPIN_RETURN_SPACER.DWG		
SCALE: FULL	DATE: 8-25-98	PART #: 4338.1
SHEET SIZE: B	REV.: 1	
DRAWN BY: EAW/JWS		
TOLERANCE: ±0.003	UNLESS OTHERWISE SPECIFIED	
TOLERANCE HELD AFTER PLATING	ALL DIMENSIONS ARE IN INCHES	
MATL.: STAINLESS STEEL TUBING 1/2 O.D. X 0.035 WALL	QTY.: 1	
FINISH:	SHEET 1 OF 1	

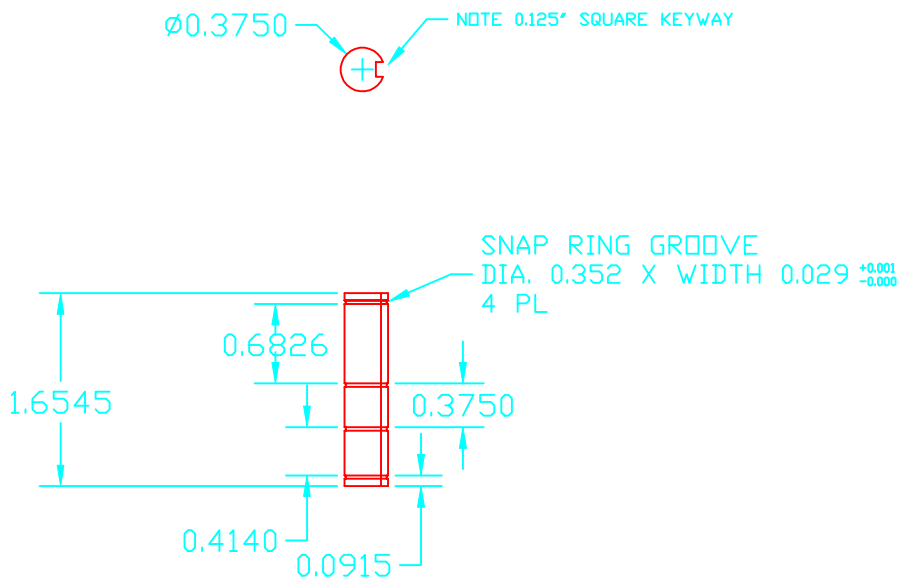

NAME: KPIN_RETURN_SHAFT.DWG		
SCALE: FULL	DATE: 2-10-99	PART #: 4329.2
SHEET SIZE: B	REV.: 2	
DRAWN BY: EAW		
TOLERANCE: ±0.001	UNLESS OTHERWISE SPECIFIED	
TOLERANCE HELD AFTER PLATING	ALL DIMENSIONS ARE IN INCHES	
MATL.: COLD FINISHED OR GROUND STAINLESS STEEL BAR	QTY.: 1	
FINISH: GRIND AND CHAMFER ROD ENDS	SHEET 1 OF 1	

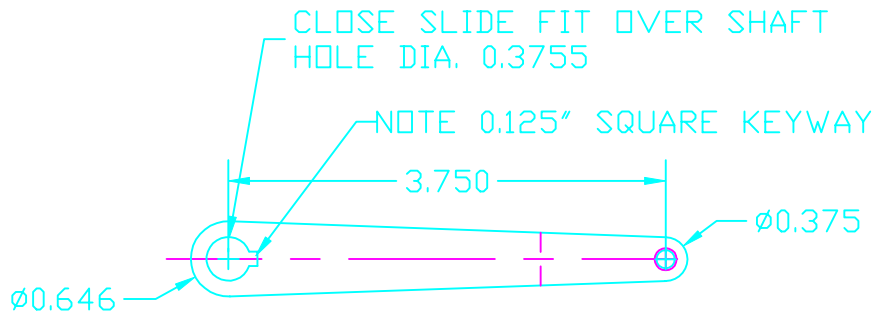

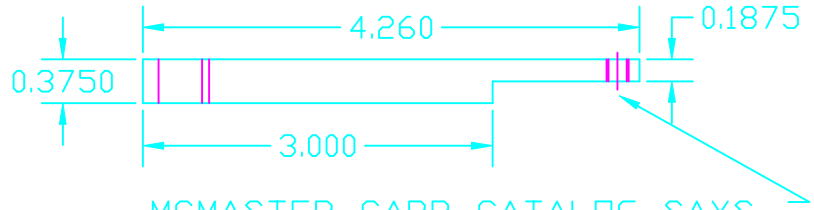

MCMASTER CARR CATALOG SAYS
THIS OUGHT TO BE 10-32 THD FOR THE SHOULDER SCREW
BUT MACHINERY'S H'BOOK SAYS 10-24
PLEASE FIT THE FASTENER AS RECEIVED.

NAME: KPIN_RETURN_ARM.DWG		
SCALE: FULL	DATE: 4-14-99	PART #: 4328.2
SHEET SIZE: B	REV.: 2	
DRAWN BY: EAW/JWS		
TOLERANCE: ±0.003	UNLESS OTHERWISE SPECIFIED	
TOLERANCE HELD AFTER PLATING	ALL DIMENSIONS ARE IN INCHES	
MATL.: MONEL/STAINLESS STEEL	QTY.: 1	
FINISH: DEBURR EDGES	SHEET 1 OF 1	

KPIN MOUNTING LUG 1 #4009.2

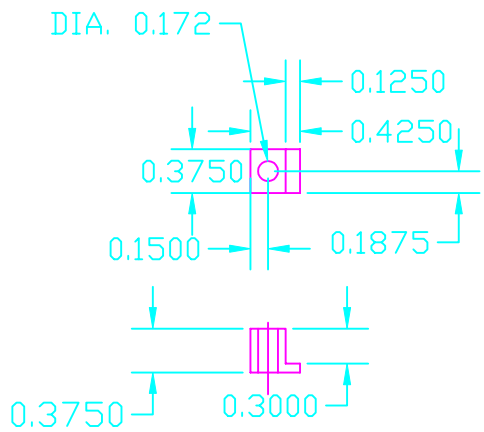

NAME: KPIN_LUGS.DWG		
SCALE: FULL	DATE: 5-3-99	PART #: 4009.2
SHEET SIZE: B	REV.: 1	
DRAWN BY: EAW/JWS		
TOLERANCE: ±0.003	UNLESS OTHERWISE SPECIFIED	
TOLERANCE HELD AFTER PLATING	ALL DIMENSIONS ARE IN INCHES	
MATL.: MONEL OR STAINLESS STEEL	QTY.: 12	
FINISH:	SHEET 1 OF 1	

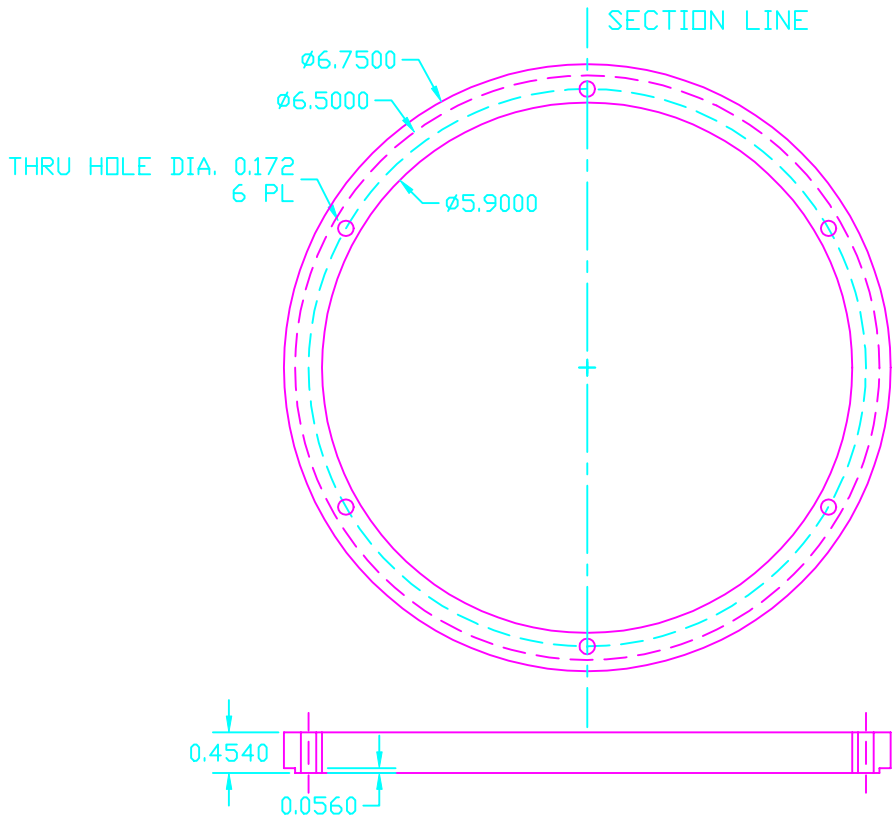

NAME: KPIN_LUG_RING_v1.DWG		
SCALE: FULL	DATE: 11-19-99	PART #:
SHEET SIZE: C	REV.:	
DRAWN BY: EAW/JWS		
TOLERANCE: ±0.003	UNLESS OTHERWISE SPECIFIED	
TOLERANCE HELD AFTER PLATING	ALL DIMENSIONS ARE IN INCHES	
MATL.: MONEL	QTY.: 1	
FINISH:	SHEET 1 OF 1	

#4004.2 LEVER

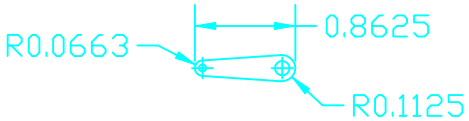

PERPENDICULARITY
IS IMPORTANT
NOTE TOLERANCE

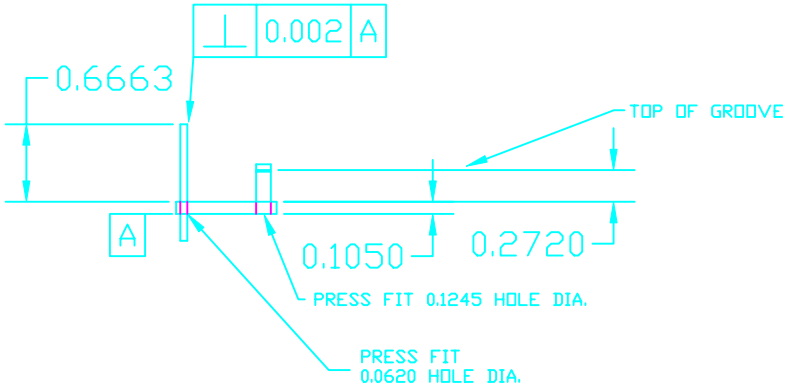

#4005.1 LEVER PIN 1

USE UNBRAKO ALLOY STEEL DOWEL
#16097

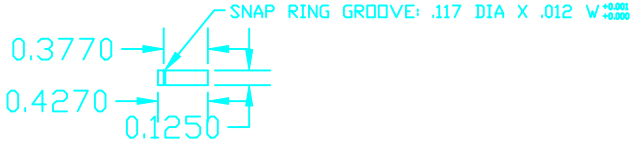

#4006.1 LEVER PIN 2

USE UNBRAKO ALLOY STEEL DOWEL
#14015

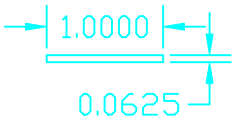

NAME: KPIN_LEVER.DWG		
SCALE: FULL	DATE: 2-15-00	PART #: 4004.2, 4005.1 4006.1
SHEET SIZE: B	REV.: 1	
DRAWN BY: EAW/JWS		
TOLERANCE: ±0.003	UNLESS OTHERWISE SPECIFIED	
TOLERANCE HELD AFTER PLATING	ALL DIMENSIONS ARE IN INCHES	
MATL.: MONEL OR STAINLESS STEEL	QTY.: 28 LEVERS	
FINISH: DEBURR EDGES		SHEET 1 OF 1

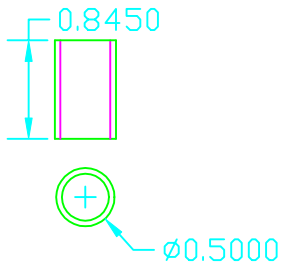

NAME: HORIZON_SPACER_3.DWG		
SCALE: FULL	DATE: 8-20-98	PART #: 4281.1
SHEET SIZE: B	REV.: 1	
DRAWN BY: EAW		
TOLERANCE: ±0.003	UNLESS OTHERWISE SPECIFIED	
TOLERANCE HELD AFTER PLATING	ALL DIMENSIONS ARE IN INCHES	
MATL.: STAINLESS STEEL TUBING 0.5 DIA. X 0.049 WALL	QTY.: 1	
FINISH: DEBURR EDGES		SHEET 1 OF 1

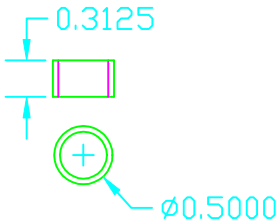

NAME: HORIZON_SPACER_2.DWG		
SCALE: FULL	DATE: 8-20-98	PART #: 4273.1
SHEET SIZE: B	REV.: 1	
DRAWN BY: EAW		
TOLERANCE: ±0.003	UNLESS OTHERWISE SPECIFIED	
TOLERANCE HELD AFTER PLATING	ALL DIMENSIONS ARE IN INCHES	
MATL.: STAINLESS STEEL TUBING 0.5 DIA. X 0.049 WALL	QTY.: 1	
FINISH: DEBURR EDGES		SHEET 1 OF 1

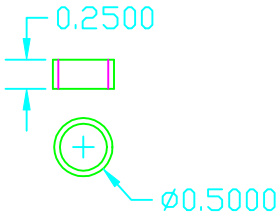

NAME: HORIZON_SPACER_1.DWG		
SCALE: FULL	DATE: 8-20-98	PART #: 4268.1
SHEET SIZE: B	REV.: 1	
DRAWN BY: EAW		
TOLERANCE: ±0.003	UNLESS OTHERWISE SPECIFIED	
TOLERANCE HELD AFTER PLATING	ALL DIMENSIONS ARE IN INCHES	
MATL.: STAINLESS STEEL TUBING 0.5 DIA. X 0.049 WALL	QTY.: 1	
FINISH: DEBURR EDGES		SHEET 1 OF 1

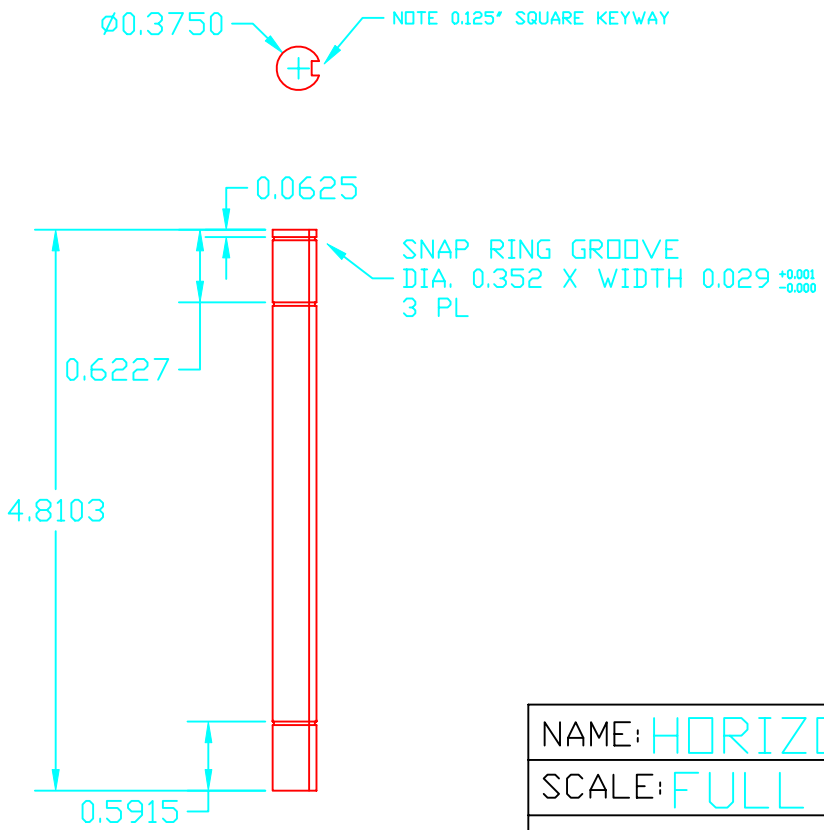

DIMENSIONS ARE FROM
ENDS OF SHAFT
TO TOP OF GROOVES

NAME: HORIZON_SHAFT_6.DWG		
SCALE: FULL	DATE: 9-27-99	PART #: 4279.3
SHEET SIZE: B	REV.: 3	
DRAWN BY: EAW		
TOLERANCE: ±0.001	UNLESS OTHERWISE SPECIFIED	
TOLERANCE HELD AFTER PLATING	ALL DIMENSIONS ARE IN INCHES	
MATL.: COLD FINISHED OR GROUND STAINLESS STEEL BAR	QTY.: 1	
FINISH:	SHEET 1 OF 1	

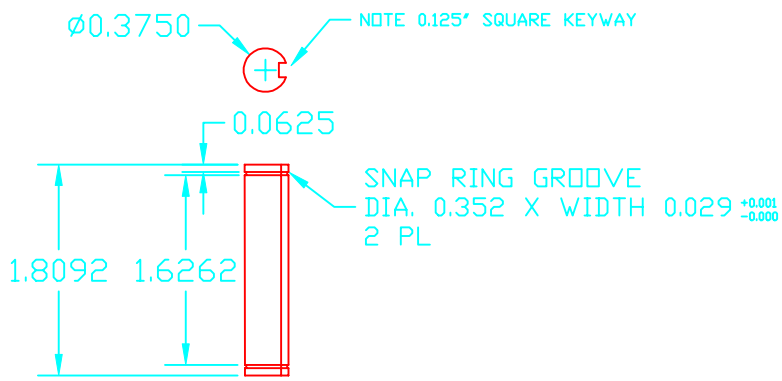

NAME: HORIZON_SHAFT_5.DWG		
SCALE: FULL	DATE: 8-20-98	PART #: 4278.1
SHEET SIZE: B	REV.: 1	
DRAWN BY: EAW		
TOLERANCE: ±0.001	UNLESS OTHERWISE SPECIFIED	
TOLERANCE HELD AFTER PLATING	ALL DIMENSIONS ARE IN INCHES	
MATL.: COLD FINISHED OR GROUND STAINLESS STEEL BAR	QTY.: 1	
FINISH: GRIND AND CHAMFER ROD ENDS	SHEET 1 OF 1	

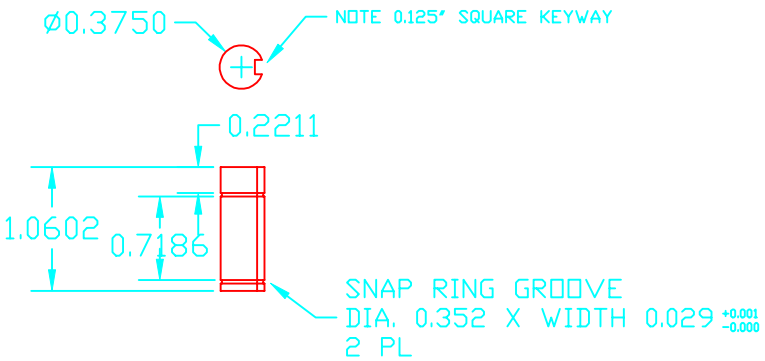

NAME: HORIZON_SHAFT_4.DWG		
SCALE: FULL	DATE: 8-20-98	PART #: 4272.1
SHEET SIZE: B	REV.: 1	
DRAWN BY: EAW		
TOLERANCE: ±0.001	UNLESS OTHERWISE SPECIFIED	
TOLERANCE HELD AFTER PLATING	ALL DIMENSIONS ARE IN INCHES	
MATL.: COLD FINISHED OR GROUND STAINLESS STEEL BAR	QTY.: 1	
FINISH: GRIND AND CHAMFER ROD ENDS	SHEET 1 OF 1	

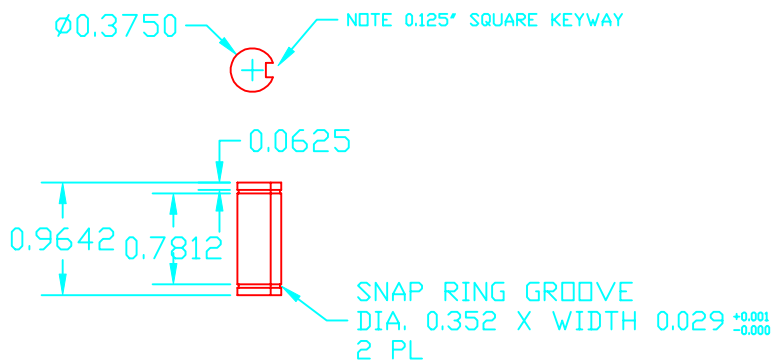

NAME: HORIZON_SHAFT_3.DWG		
SCALE: FULL	DATE: 8-20-98	PART #: 4271.1
SHEET SIZE: B	REV.: 1	
DRAWN BY: EAW		
TOLERANCE: ±0.001	UNLESS OTHERWISE SPECIFIED	
TOLERANCE HELD AFTER PLATING	ALL DIMENSIONS ARE IN INCHES	
MATL.: COLD FINISHED OR GROUND STAINLESS STEEL BAR	QTY.: 1	
FINISH: GRIND AND CHAMFER ROD ENDS	SHEET 1 OF 1	

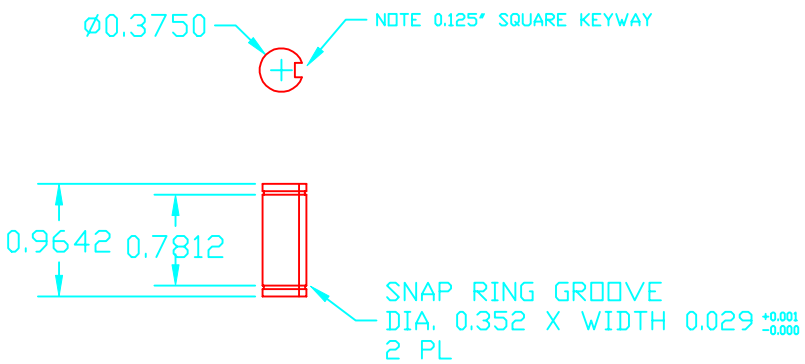

NAME: HORIZON_SHAFT_2.DWG		
SCALE: FULL	DATE: 8-20-98	PART #: 4269.1
SHEET SIZE: B	REV.: 1	
DRAWN BY: EAW		
TOLERANCE: ±0.001	UNLESS OTHERWISE SPECIFIED	
TOLERANCE HELD AFTER PLATING	ALL DIMENSIONS ARE IN INCHES	
MATL.: COLD FINISHED OR GROUND STAINLESS STEEL BAR	QTY.: 1	
FINISH: GRIND AND CHAMFER ROD ENDS	SHEET 1 OF 1	

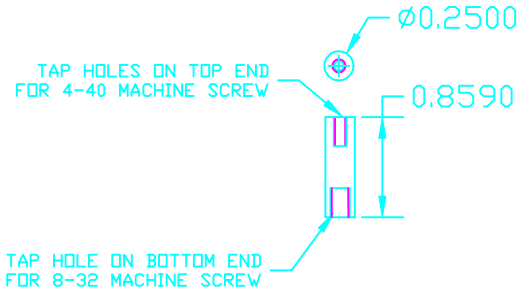

NAME: HORIZON_ROLLER_POST.DWG		
SCALE: FULL	DATE: 8-20-98	PART #: 4267.2
SHEET SIZE: B	REV.: 2	
DRAWN BY: EAW		
TOLERANCE: ±0.003	UNLESS OTHERWISE SPECIFIED	
TOLERANCE HELD AFTER PLATING	ALL DIMENSIONS ARE IN INCHES	
MATL.: STAINLESS STEEL BAR	QTY.: 6	
FINISH:	SHEET 1 OF 1	

#4276.2 HORIZON DISK

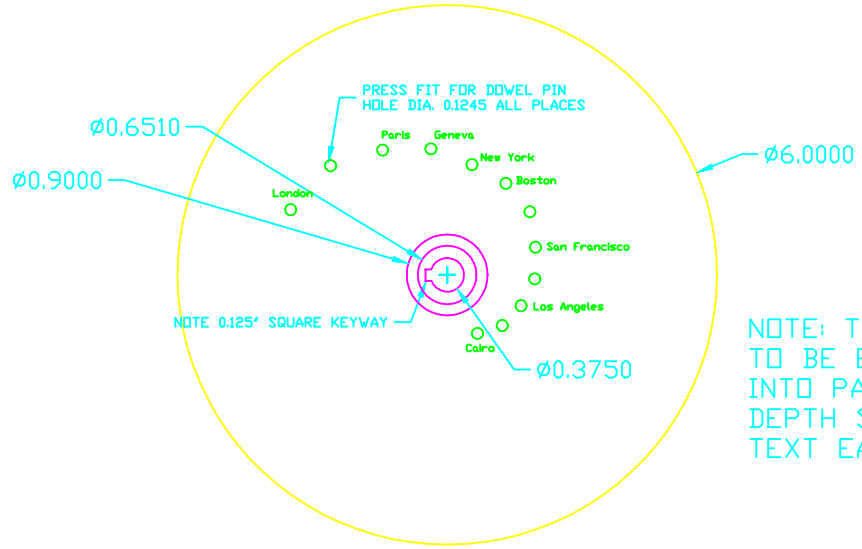

NOTE: TEXT NEAR HOLES TO BE ETCHED OR MILLED INTO PART AS SHOWN. DEPTH SHOULD MAKE TEXT EASILY VISIBLE.

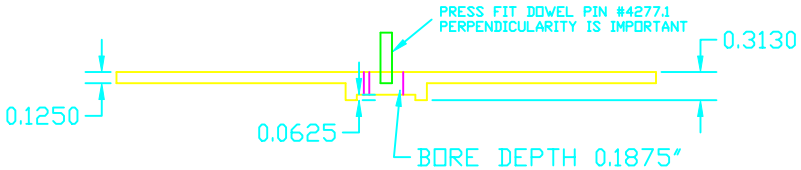

#4277.1 HORIZON DISK PIN

USE MCMASTER CARR #90145A472 AS RAW MATERIAL
STAINLESS STEEL 0.125" DIA. DOWEL PIN

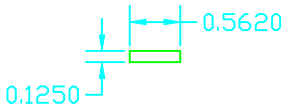

NAME: HORIZON_DISK.DWG		
SCALE: FULL	DATE: 3-2-99	PART #: 4276.3,4277.1
SHEET SIZE: C	REV.: 3	
DRAWN BY: EAW		
TOLERANCE: ±0.005	UNLESS OTHERWISE SPECIFIED	
TOLERANCE HELD AFTER PLATING	ALL DIMENSIONS ARE IN INCHES	
MATL.: 360 BRASS	QTY.: 1 OF EACH PART	
FINISH:	SHEET 1 OF 1	

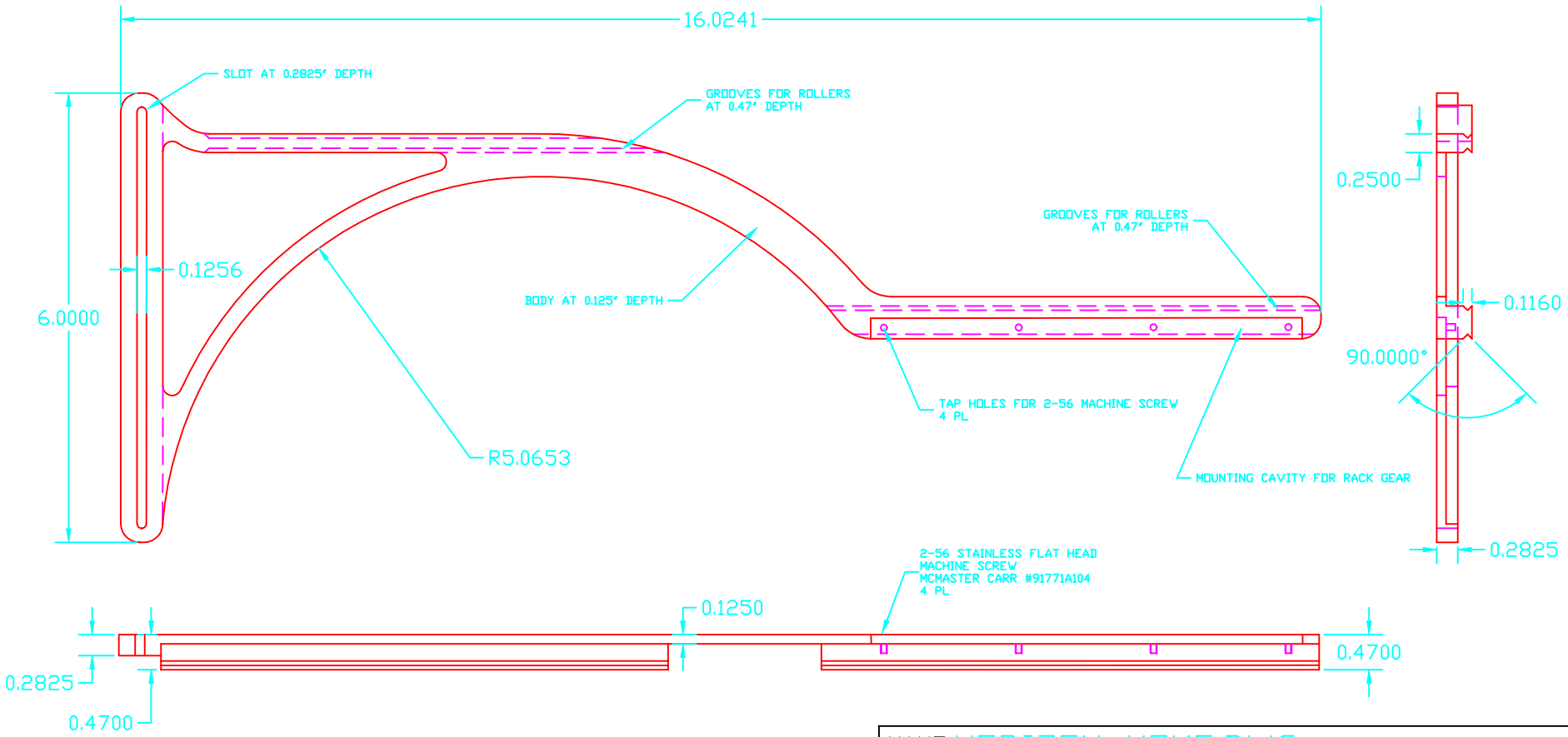

NOTE:
SOME DIMENSIONS OMITTED
DUE TO COMPLEXITY OF DRAWING.
OVERALL DIMENSIONS GIVEN
AS REFERENCE.
DRAWING IS TO SCALE.

NAME: HORIZON_YOKE.DWG		
SCALE: FULL	DATE: 8-21-98	PART #: 4284.1
SHEET SIZE: C	REV.: 1	
DRAWN BY: EAW		
TOLERANCE: ±0.005	UNLESS OTHERWISE SPECIFIED	
TOLERANCE HELD AFTER PLATING	ALL DIMENSIONS ARE IN INCHES	
MATL.: 360 BRASS	QTY.: 1	
FINISH:	SHEET 1 OF 1	

```
Sinrise[0, 0, 0]
```

```
General::spell1 :
 Possible spelling error: new symbol name "Sinrise" is similar to existing symbol "Sunrise".

Sinrise[0, 0, 0]
```

```
Sunrise[0, 0, 0]
```

```
0.249749
```

```
DayLength[fixedDay_, lat_] := Sunset[fixedDay, lat, 0] - Sunrise[fixedDay, lat, 0]
```

```
DayLength[0, 0]
```

```
0.505195
```

```
Plot[DayLength[d, 45], {d, 0, 365, 1}]
```

```
Plot::pllim : Limit specification {d, 0, 365, 1} is not of the form {x, xmin, xmax}.

Plot[DayLength[d, 45], {d, 0, 365, 1}]
```

```
LondonLat = 51;
CairoLat = 30;
```

```
ListPlot[Table[DayLength[d, LondonLat], {d, 1, 365, 1}]]
```

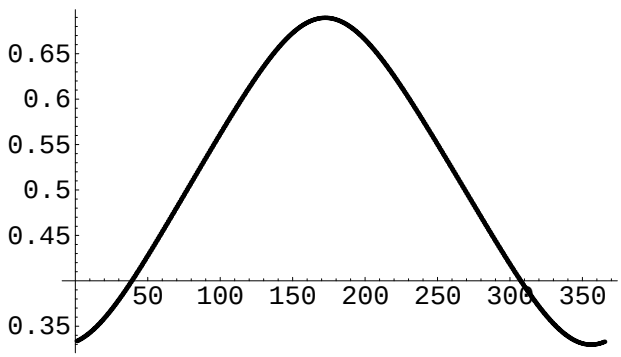


```
- Graphics -
```

```
Max[Table[DayLength[d, LondonLat], {d, 1, 365, 1}]]
```

```
0.68952
```

```
Max[Table[DayLength[d, CairoLat], {d, 1, 365, 1}]]
```

```
0.586651
```

```
DegreesMotion[daylength_] := 90 - 180 * daylength
```

```
DegreesMotion[.69]
```

```
-34.2
```

```
DegreesMotion[.58]
```

-14.4

```
24 * .69
```

16.56

```
24 * .58
```

13.92

```
180.0 * 5 / 24
```

37.5

```
NewYearsDay[year_] := ToFixed[Gregorian[January[], 1, year]]
```

```
TimeOff[year_] := 60 * 24 * Calendrica`Private`EquationOfTime[NewYearsDay[year]]
```

```
TimeOff[1]
```

-0.185134

```
ListPlot[Table[TimeOff[x], {x, 2000, 12000, 100}]]
```

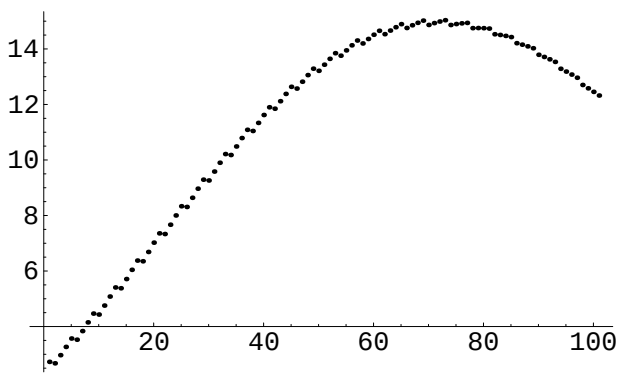

- Graphics -

```
ex = Sin[23.5 Degree]
```

```
0.398749
```

```
Plot[{ArcSin[ex] Sin[x], ArcSin[ex Sin[x]]}, {x, 1, 8}]
```

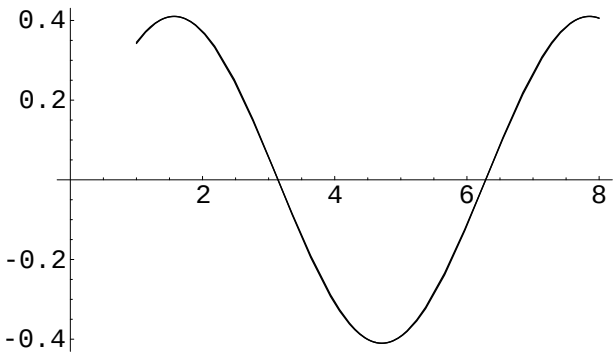


```
- Graphics -
```

```
Plot[ArcSin[ex] Sin[x] - ArcSin[ex Sin[x]], {x, 1, 8}]
```

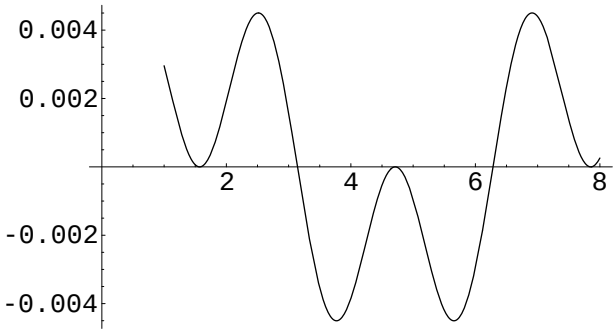


```
- Graphics -
```

```
Plot[ArcSin[Tan[38 °] Tan[ArcSin[Sin[ex] Sin[2 π t]]]],
 {t, 0, 1}]
```

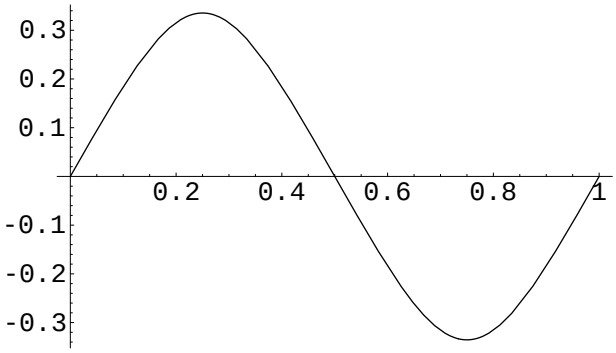

- Graphics -

```
L = 52 °
```

52 °

```
Plot[{ArcSin[Tan[L] Tan[ArcSin[Sin[ex] Sin[2 π t]]]],
  ArcSin[Tan[L] Tan[ex] ] Sin[2 π t]},
 {t, 0, 1}]
```

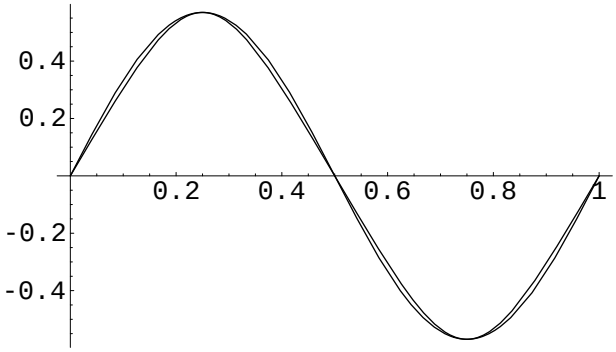

- Graphics -

```
Plot[ArcSin[Tan[L] Tan[ArcSin[Sin[ex] Sin[2 π t]]]] –
  ArcSin[Tan[L] Tan[ex] ] Sin[2 π t],
 {t, 0, 1}]
```

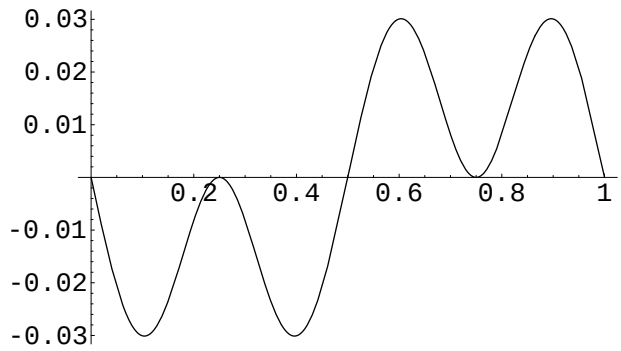

- Graphics -

```
Plot[ArcSin[Tan[L] Tan[ArcSin[Sin[ex] Sin[2 π t]]]] –
  Tan[L]  Tan[ex ] Sin[2 π t],
 {t, 0, 1}]
```

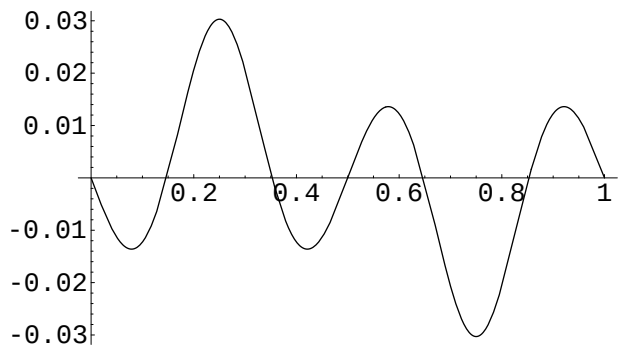

- Graphics -

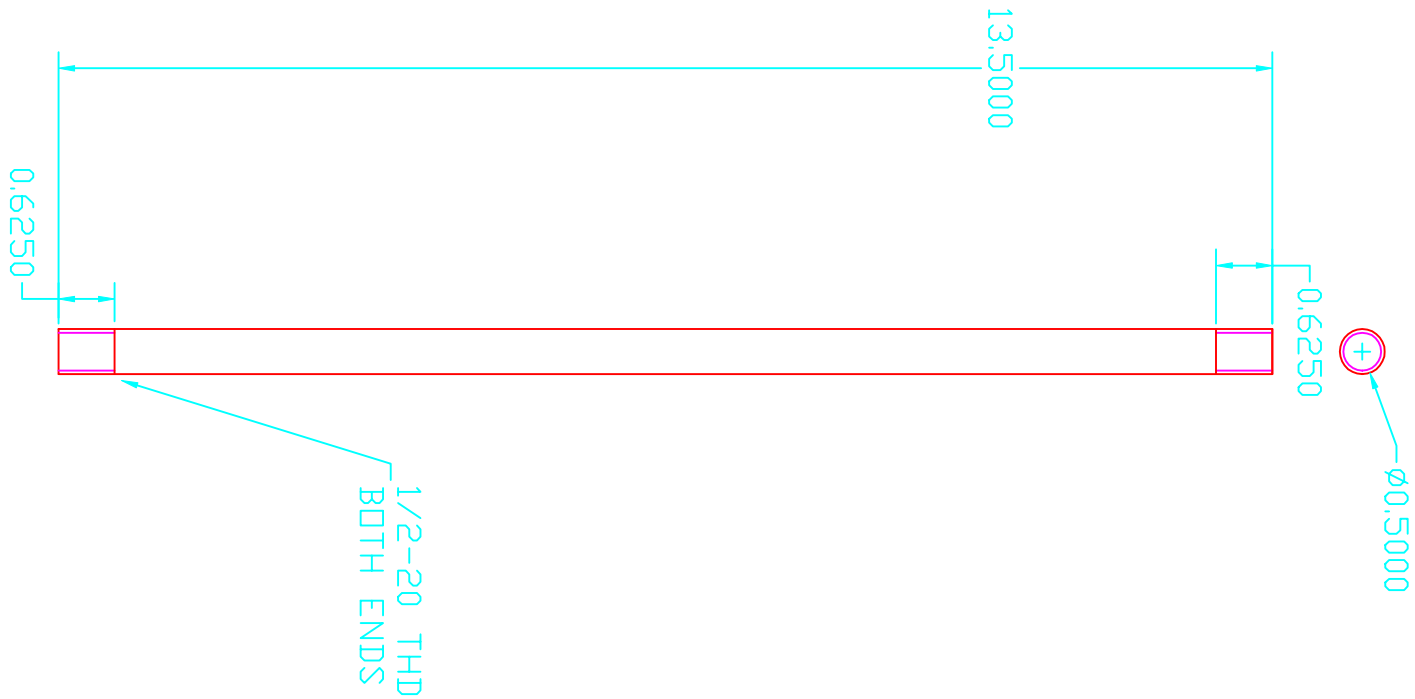

NAME: HORIZ_LEG.DWG		
SCALE: FULL	DATE: 9-27-99	PART #: 4442.1
SHEET SIZE: C	REV.: 1	
DRAWN BY: EAW		
TOLERANCE: ±0.001	UNLESS OTHERWISE SPECIFIED	
TOLERANCE HELD AFTER PLATING	ALL DIMENSIONS ARE IN INCHES	
MATL.: STAINLESS STEEL BAR COLD FINISHED OR GROUND	QTY.: 6	
FINISH:	SHEET 1 OF 1	

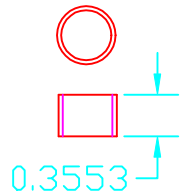

NAME: GENEVA_SPACER.DWG		
SCALE: FULL	DATE: 7-6-98	PART #: 4026.2
SHEET SIZE: B	REV.: 2	
DRAWN BY: EAW/JWS		
TOLERANCE: ±0.003	UNLESS OTHERWISE SPECIFIED	
TOLERANCE HELD AFTER PLATING	ALL DIMENSIONS ARE IN INCHES	
MATL.: STAINLESS STEEL TUBING 1/2 O.D. X 0.035 WALL	QTY.: 5	
FINISH:	SHEET 1 OF 1	

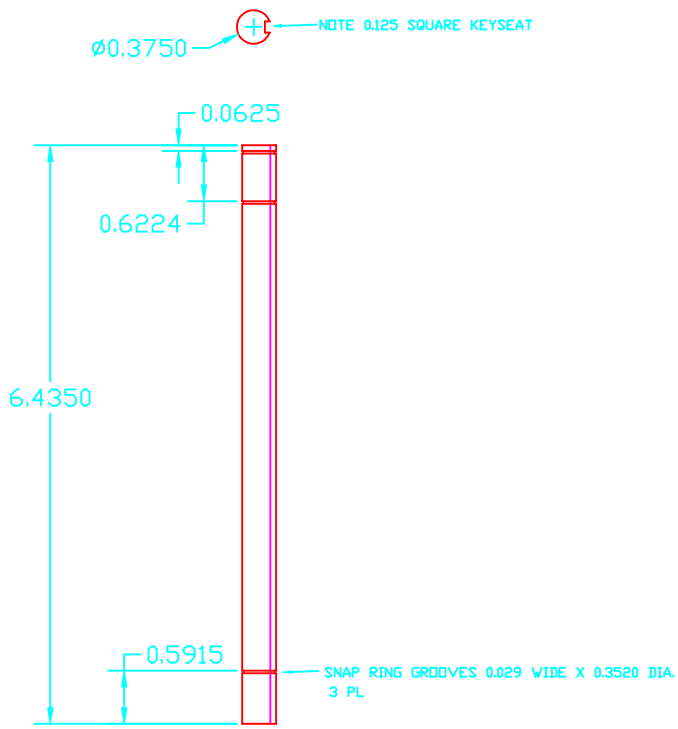

NAME: GENEVA_SHAFT_6.DWG		
SCALE: FULL	DATE: 10-12-99	PART #: 4038.5
SHEET SIZE: C	REV.: 5	
DRAWN BY: EAW/JWS		
TOLERANCE: ±0.001	UNLESS OTHERWISE SPECIFIED	
TOLERANCE HELD AFTER PLATING	ALL DIMENSIONS ARE IN INCHES	
MATL.: STAINLESS STEEL BAR COLD FINISHED OR GROUND	QTY.: 1	
FINISH:	SHEET 1 OF 1	

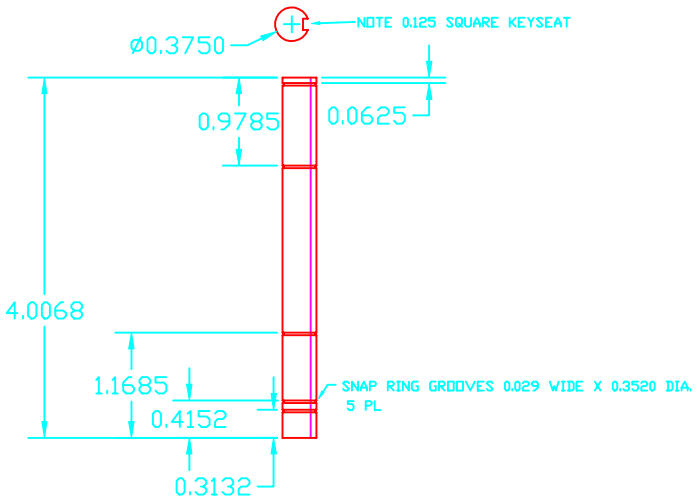

DIMENSIONS ARE FROM
ENDS OF SHAFT
TO TOP OF GROOVES

NAME: GENEVA_SHAFT_5.DWG		
SCALE: FULL	DATE: 9-24-99	PART #: 4037.3
SHEET SIZE: C	REV.: 3	
DRAWN BY: EAW/JWS		
TOLERANCE: ±0.001	UNLESS OTHERWISE SPECIFIED	
TOLERANCE HELD AFTER PLATING	ALL DIMENSIONS ARE IN INCHES	
MATL.: STAINLESS STEEL BAR COLD FINISHED OR GROUND	QTY.: 1	
FINISH:	SHEET 1 OF 1	

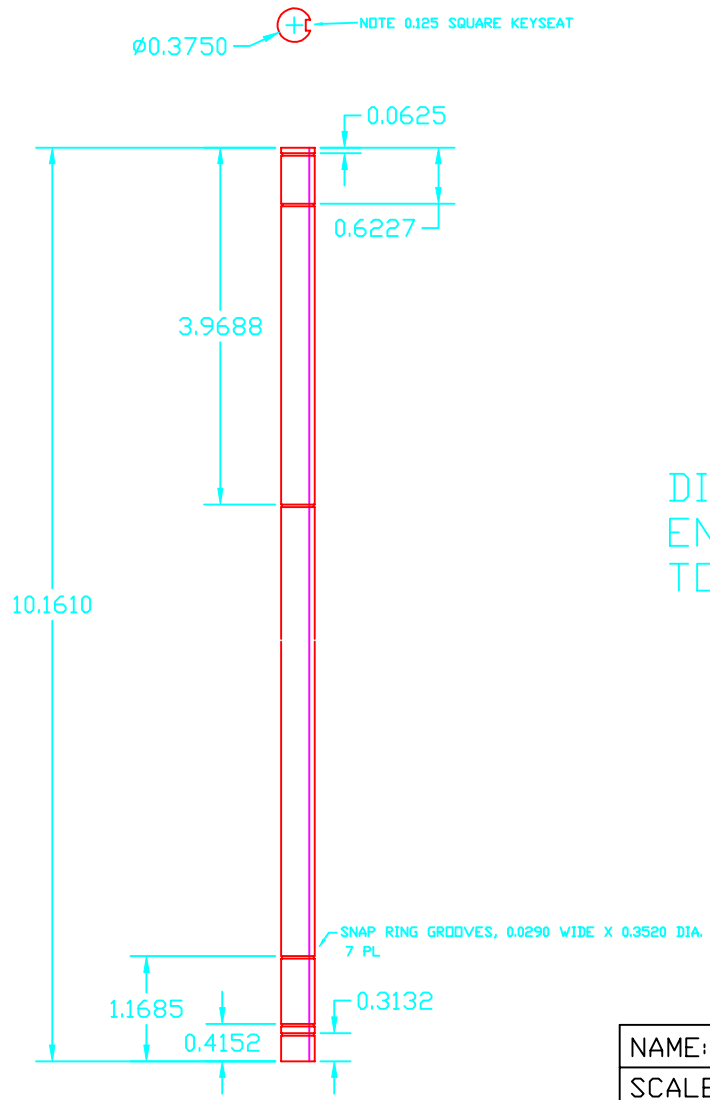

DIMENSIONS ARE FROM
ENDS OF SHAFT
TO TOP OF GROOVES

NAME: GENEVA_SHAFT_4.DWG		
SCALE: FULL	DATE: 9-24-99	PART #: 4036.3
SHEET SIZE: C	REV.: 3	
DRAWN BY: EAW/JWS		
TOLERANCE: ±0.001	UNLESS OTHERWISE SPECIFIED	
TOLERANCE HELD AFTER PLATING	ALL DIMENSIONS ARE IN INCHES	
MATL.: STAINLESS STEEL BAR COLD FINISHED OR GROUND	QTY.: 1	
FINISH:	SHEET 1 OF 1	

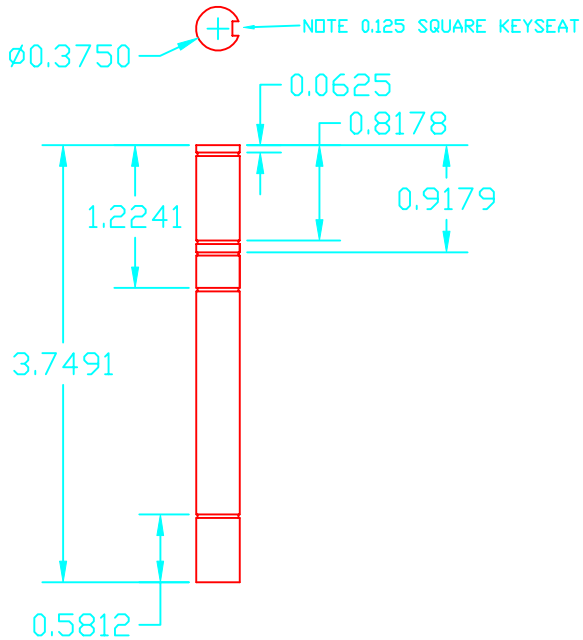

DIMENSIONS ARE FROM
ENDS OF SHAFT
TO TOP OF GROOVES

NAME: GENEVA_SHAFT_3.DWG		
SCALE: FULL	DATE: 9-24-99	PART #: 4035.4
SHEET SIZE: B	REV.: 4	
DRAWN BY: EAW/JWS		
TOLERANCE: ±0.001	UNLESS OTHERWISE SPECIFIED	
TOLERANCE HELD AFTER PLATING	ALL DIMENSIONS ARE IN INCHES	
MATL.: STAINLESS STEEL BAR COLD FINISHED OR GROUND	QTY.: 1	
FINISH:	SHEET 1 OF 1	

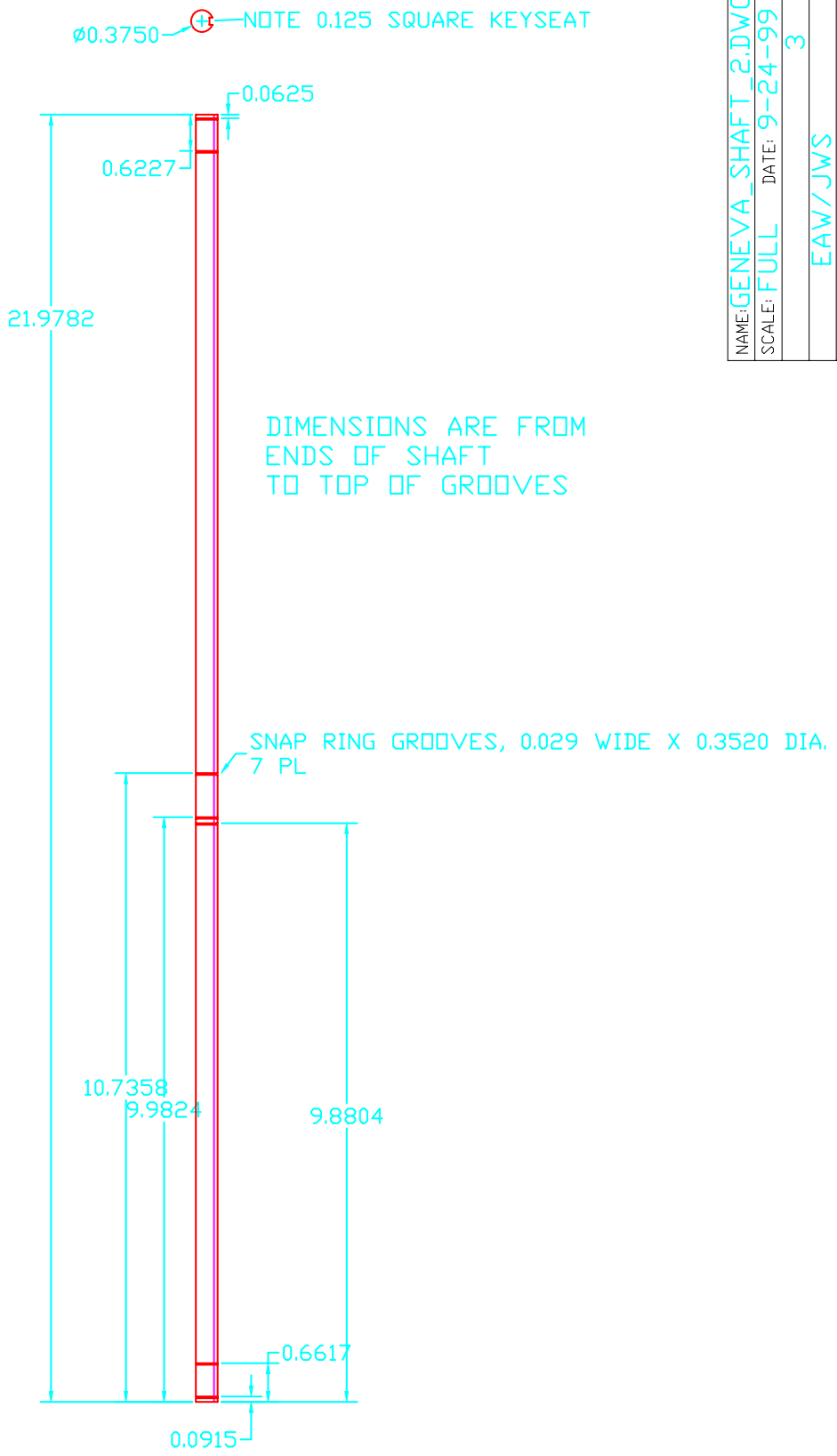

NAME: GENEVA_SHAFT_2.DWG
SCALE: FULL DATE: 9-24-99 4034.3
3
EAW/JWS
±0.001
STAINLESS STEEL BAR
COLD FINISHED OR GROUND
POLISHED FULL LENGTH
1
IONS ARE IN INCHES
1 1

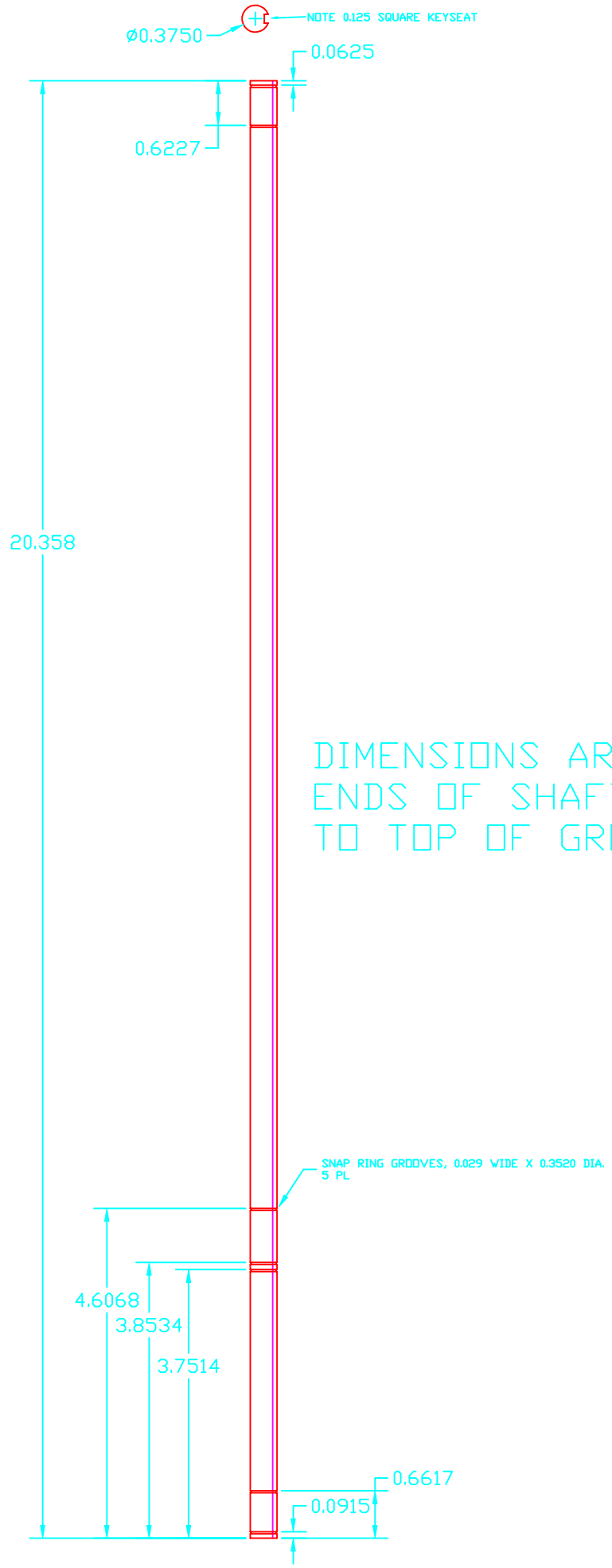

DIMENSIONS ARE FROM
ENDS OF SHAFT
TO TOP OF GROOVES

NAME: GENEVA SHAFT 1.DWG			
SCALE: FULL	DATE: 9-24-99	PART #: 4033.3	
SHEET SIZE: C		REV.: 3	
DRAWN BY: EAW/JWS			
TOLERANCE: ±0.001		UNLESS OTHERWISE SPECIFIED	
TOLERANCE HELD AFTER PLATING		ALL DIMENSIONS ARE IN INCHES	
MATL.: STAINLESS STEEL BAR COLD FINISHED OR GROUND		QTY.: 1	
FINISH:			SHEET 1 OF 1

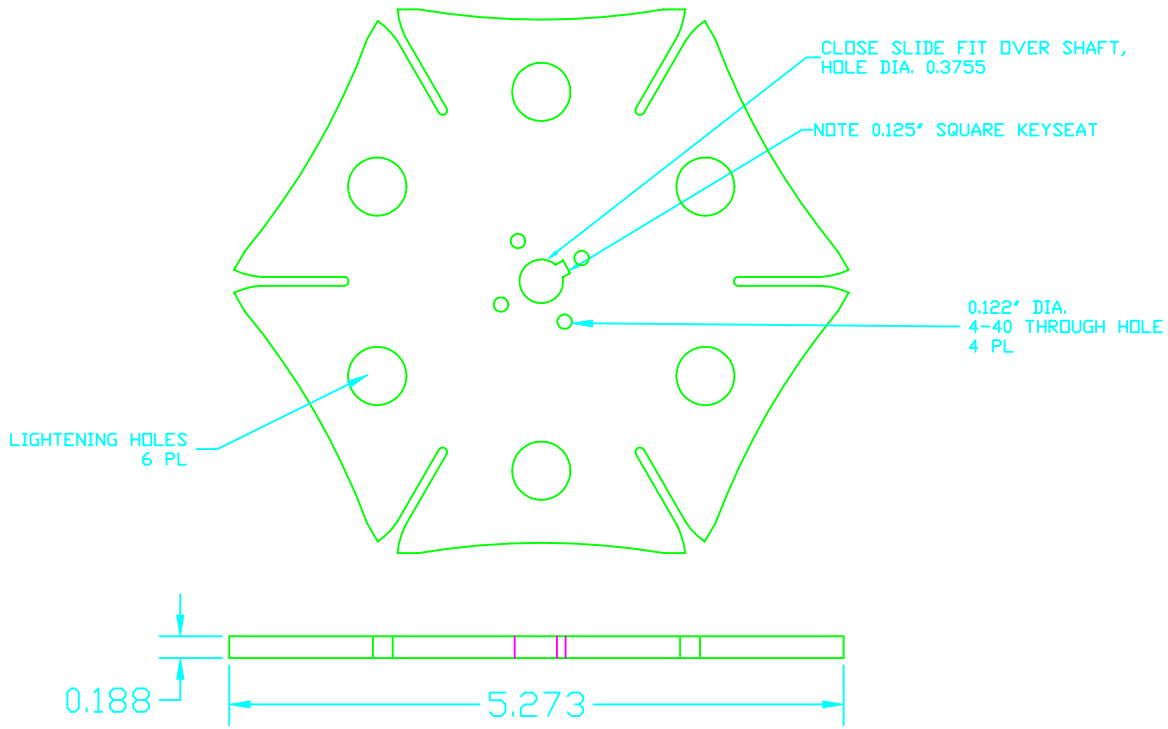

NOTE:

SOME DIMENSIONS OMITTED
DUE TO COMPLEXITY OF PART.
DRAWING IS TO SCALE

NAME: GENEVA.DWG		
SCALE: FULL	DATE: 7-6-98	PART #: 4027.1
SHEET SIZE: B	REV.: 1	
DRAWN BY: EAW/JWS		
TOLERANCE: ±0.005	UNLESS OTHERWISE SPECIFIED	
TOLERANCE HELD AFTER PLATING	ALL DIMENSIONS ARE IN INCHES	
MATL.: 360 BRASS	QTY.: 5	
FINISH:	SHEET 1 OF 1	

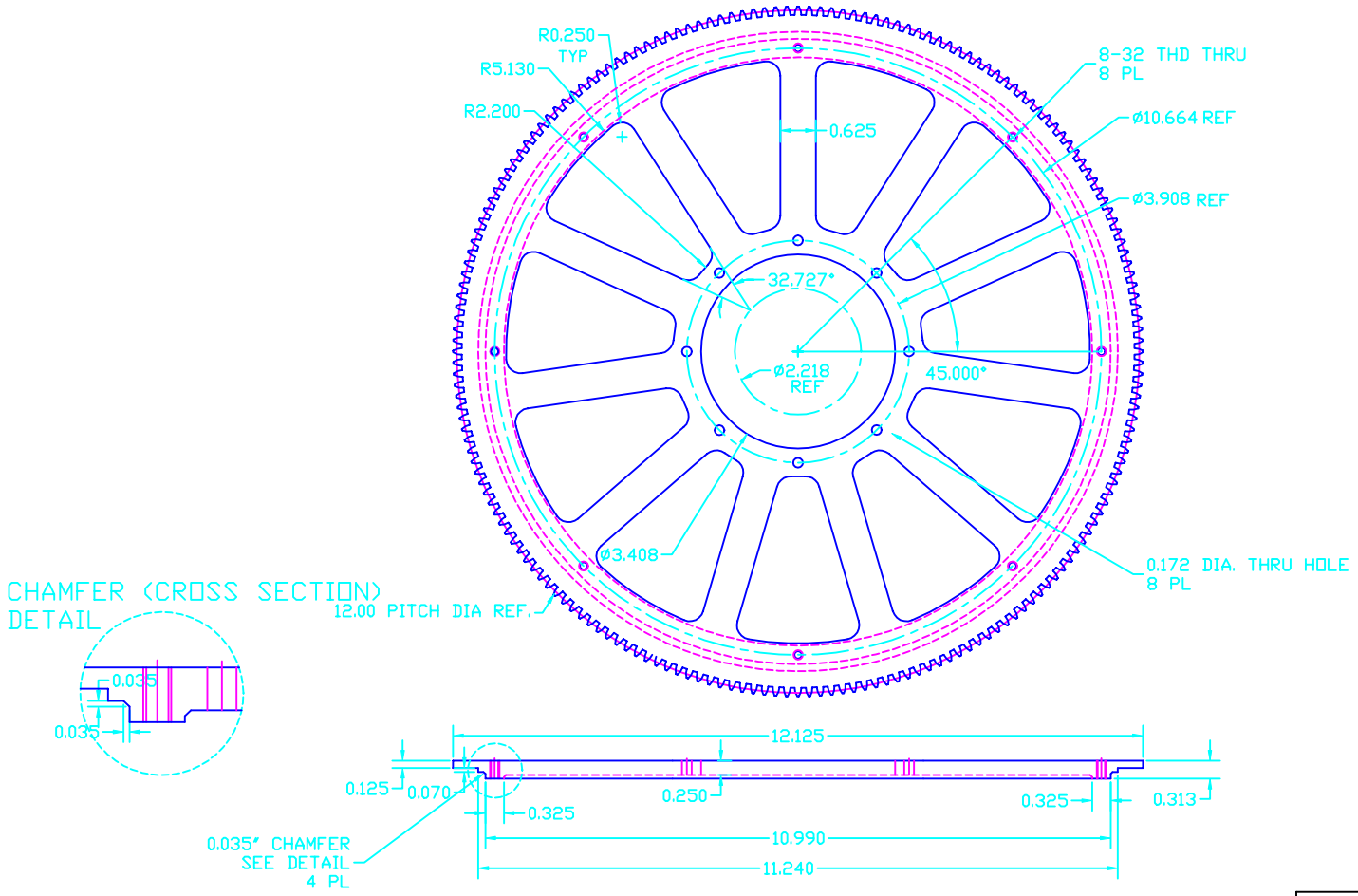

16 DIAMETRAL PITCH
20 DEGREE PRESSURE ANGLE
STD ANSI INVOLUTE SPUR GEAR

NAME: GEAR7.DWG (192 TOOTH GEAR - SIDEREAL DAY)		
SCALE: FULL	DATE: 7-19-99	PART #: 4292.5
SHEET SIZE: D	REV.: 5	
DRAWN BY: JWS/EAW		
TOLERANCE: AGMA QUALITY #10 OTHER DIMS BACKLASH CLASS C +/- 0.003	UNLESS OTHERWISE SPECIFIED	
TOLERANCE HELD AFTER PLATING	ALL DIMENSIONS ARE IN INCHES	
MATL.: BRASS	QTY.: 1	
FINISH:	SHEET 1 OF 1	

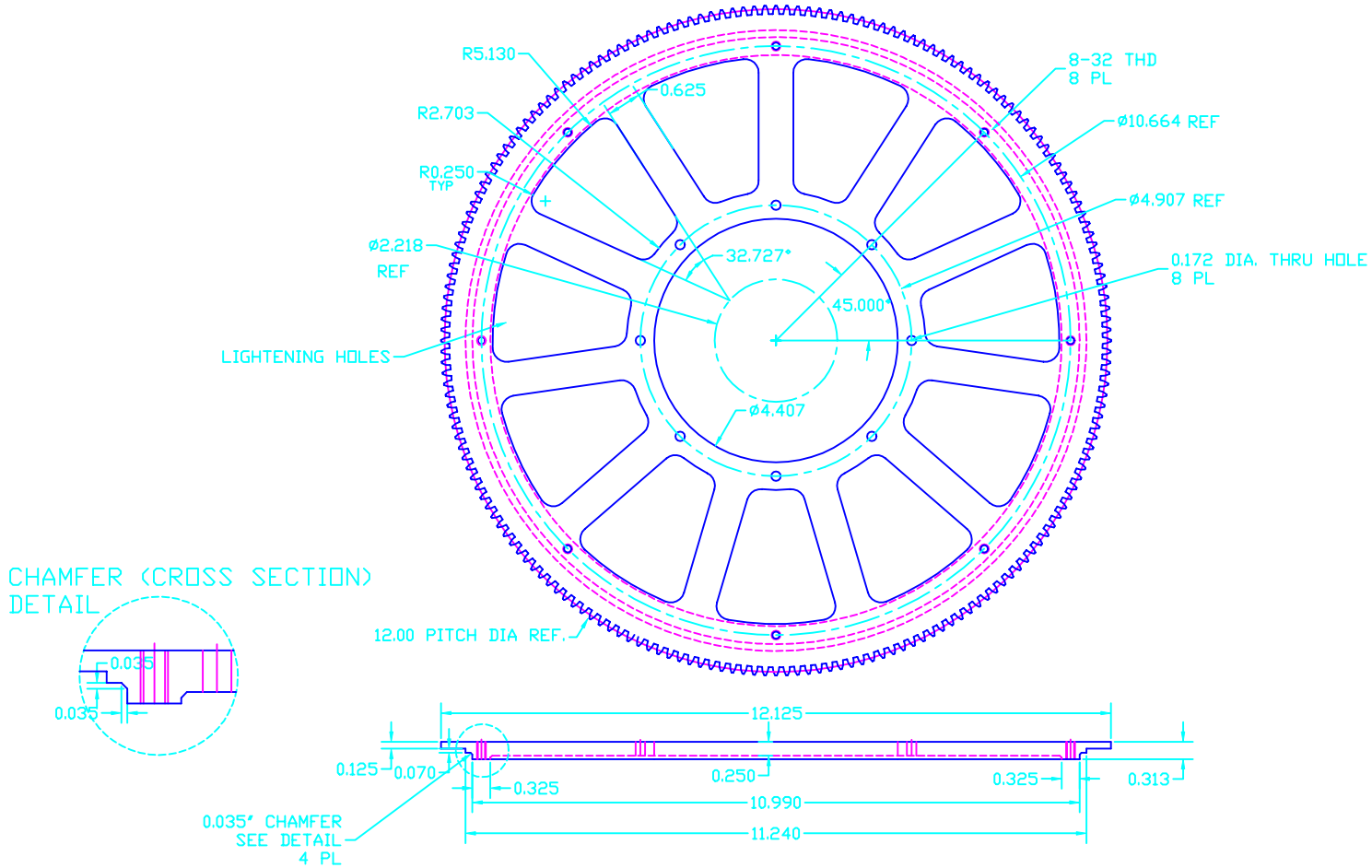

16 DIAMETRAL PITCH
20 DEGREE PRESSURE ANGLE
STD ANSI INVOLUTE SPUR GEAR

NAME: GEAR6.DWG (192 TOOTH GEAR -- MOON)		
SCALE: FULL	DATE: 7-19-99	PART #: 4294.5
SHEET SIZE: D	REV.: 5	
DRAWN BY: JWS/EAW		
TOLERANCE: AGMA QUALITY #10 BACKLASH CLASS C OTHER DIMS +/- 0.003 UNLESS OTHERWISE SPECIFIED		
TOLERANCE HELD AFTER PLATING	ALL DIMENSIONS ARE IN INCHES	
MATL.: BRASS	QTY.: 1	
FINISH:	SHEET 1 OF 1	

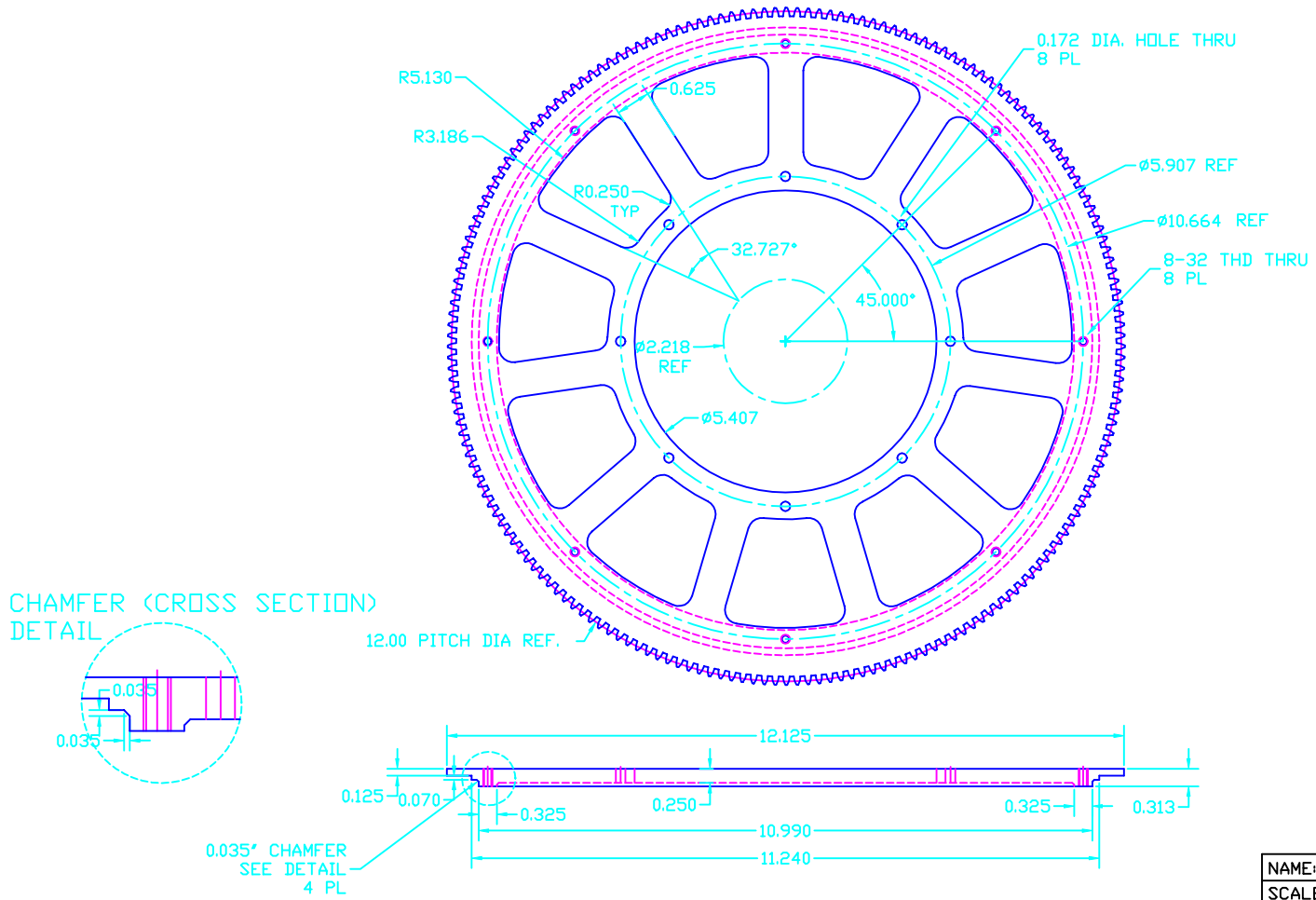

16 DIAMETRAL PITCH
20 DEGREE PRESSURE ANGLE
STD ANSI INVOLUTE SPUR GEAR

NAME: GEAR5.DWG (192 TOOTH GEAR -- SUN)		
SCALE: FULL	DATE: 7-19-99	PART #: 4298.5
SHEET SIZE: D	REV.: 5	
DRAWN BY: JWS/EAW		
TOLERANCE: AGMA QUALITY #10 BACKLASH CLASS C	OTHER DIMS +/- 0.003	UNLESS OTHERWISE SPECIFIED
TOLERANCE HELD AFTER PLATING		ALL DIMENSIONS ARE IN INCHES
MATL.: BRASS	QTY.: 1	
FINISH:		SHEET 1 OF 1

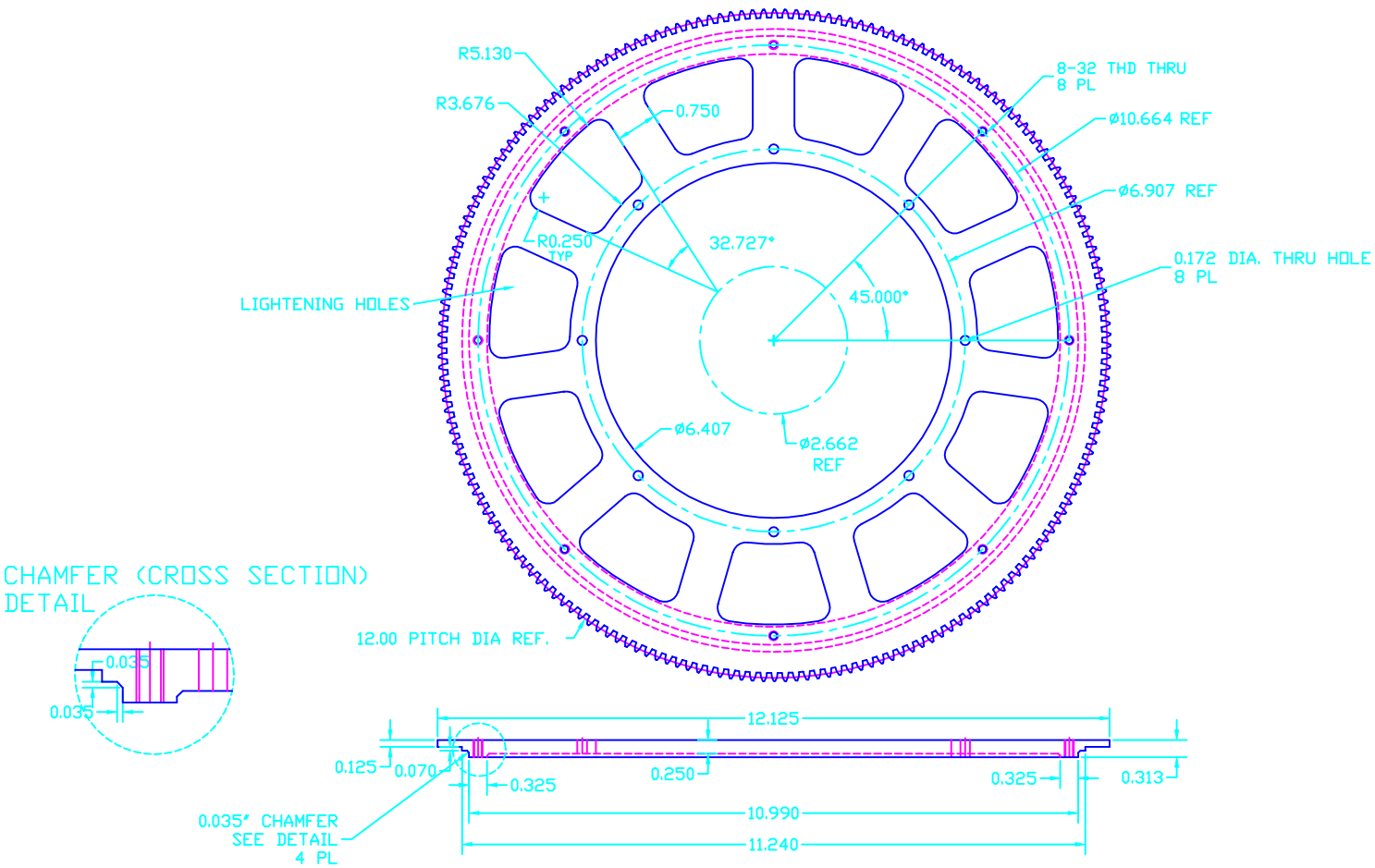

16 DIAMETRAL PITCH
20 DEGREE PRESSURE ANGLE
STD ANSI INVOLUTE SPUR GEAR

NAME: GEAR4.DWG (192 TOOTH GEAR -- SUNSET)		
SCALE: FULL	DATE: 7-19-99	PART #: 4315.5
SHEET SIZE: D	REV.: 5	
DRAWN BY: JWS/EAW		
TOLERANCE: AGMA QUALITY #10 BACKLASH CLASS C	OTHER DIMS +/- 0.003	UNLESS OTHERWISE SPECIFIED
TOLERANCE HELD AFTER PLATING		ALL DIMENSIONS ARE IN INCHES
MATL.: BRASS	QTY.: 1	
FINISH:		SHEET 1 OF 1

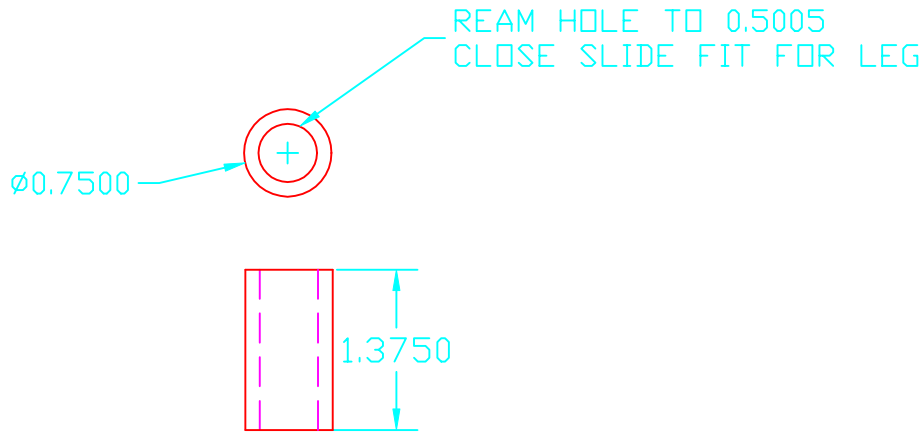

NAME: GEAR3_LEG_SPACER.DWG		
SCALE: FULL	DATE: 9-27-99	PART #: 4332.1
SHEET SIZE: B	REV.: 1	
DRAWN BY: EAW		
TOLERANCE: ±0.003	UNLESS OTHERWISE SPECIFIED	
TOLERANCE HELD AFTER PLATING	ALL DIMENSIONS ARE IN INCHES	
MATL.: STAINLESS STEEL TUBING 0.625 DIA. X 0.035 WALL	QTY.: 6	
FINISH:	SHEET 1 OF 1	

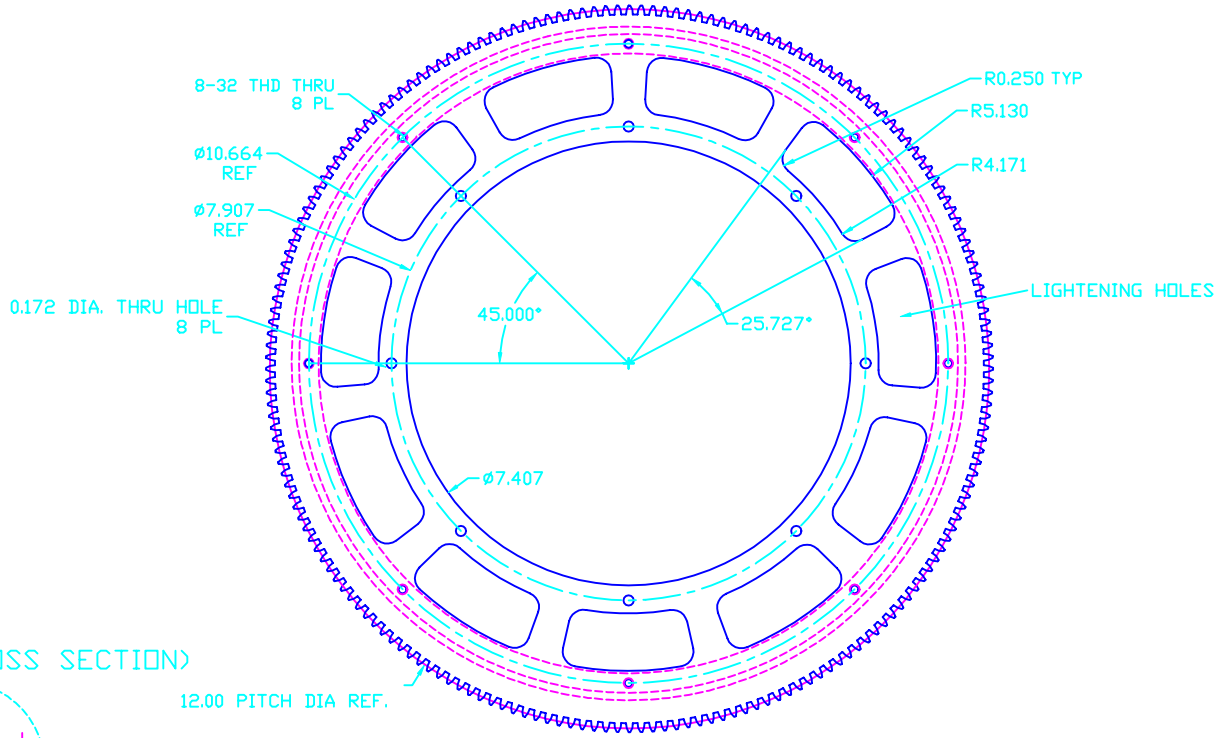

CHAMFER (CROSS SECTION)
DETAIL

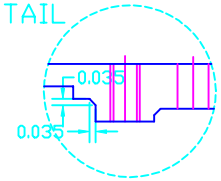

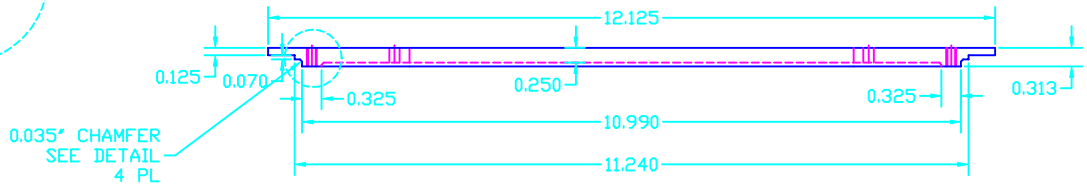

16 DIAMETRAL PITCH
20 DEGREE PRESSURE ANGLE
STD ANSI INVOLUTE SPUR GEAR

NAME: GEAR3.DWG (192 TOOTH GEAR -- SUNRISE)		
SCALE: FULL	DATE: 7-19-99	PART #: 4317.5
SHEET SIZE: D	REV.: 5	
DRAWN BY: JWS/EAW		
TOLERANCE: AGMA QUALITY #10 BACKLASH CLASS C	OTHER DIMS +/- 0.003 UNLESS OTHERWISE SPECIFIED	
TOLERANCE HELD AFTER PLATING	ALL DIMENSIONS ARE IN INCHES	
MATL.: BRASS	QTY.: 1	
FINISH:	SHEET 1 OF 1	

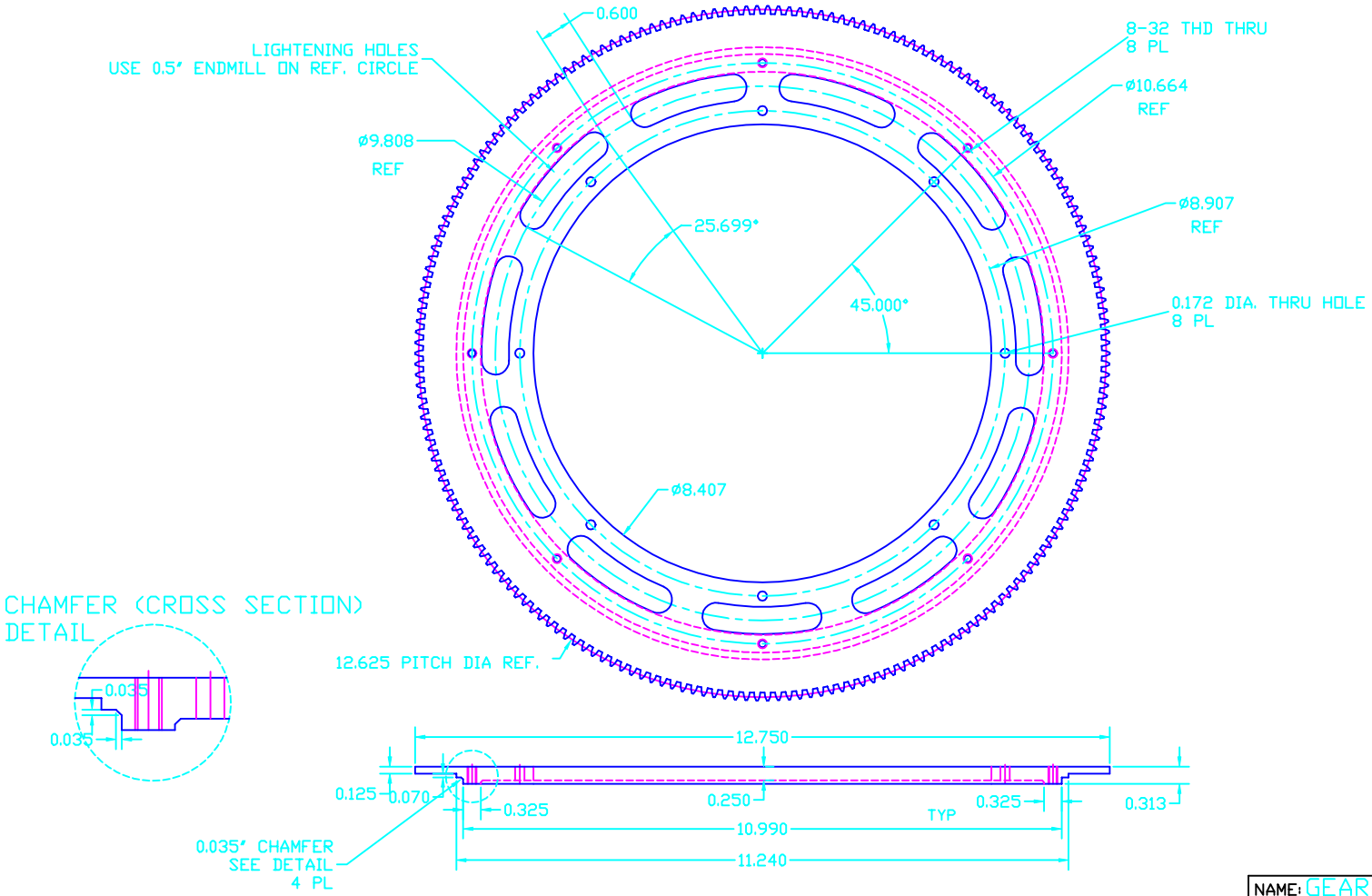

16 DIAMETRAL PITCH
20 DEGREE PRESSURE ANGLE
STD ANSI INVOLUTE SPUR GEAR

NAME: GEAR2.DWG (202 TOOTH GEAR -- CENTURY)		
SCALE: FULL	DATE: 7-19-99	PART #: 4318.5
SHEET SIZE: D	REV.: 5	
DRAWN BY: JWS/EAW		
TOLERANCE: AGMA QUALITY #10 BACKLASH CLASS C	OTHER DIMS +/- 0.003	UNLESS OTHERWISE SPECIFIED
TOLERANCE HELD AFTER PLATING		ALL DIMENSIONS ARE IN INCHES
MATL.: BRASS	QTY.: 1	
FINISH:		SHEET 1 OF 1

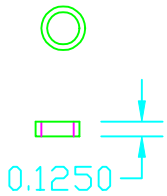

NAME: MOON_SPACER.DWG		
SCALE: FULL	DATE: 9-29-99	PART #: 4047.2
SHEET SIZE: B	REV.: 2	
DRAWN BY: EAW		
TOLERANCE: ±0.003	UNLESS OTHERWISE SPECIFIED	
TOLERANCE HELD AFTER PLATING	ALL DIMENSIONS ARE IN INCHES	
MATL.: STAINLESS STEEL TUBING 3/8 O.D. X 0.049 WALL	QTY.: 4	
FINISH:	SHEET 1 OF 1	

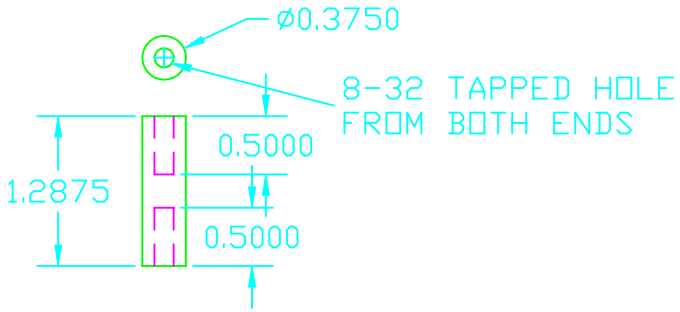

NAME: STOP_PINION_SUPPORT.DWG		
SCALE: FULL	DATE: 12-2-99	PART #: 4356.1
SHEET SIZE: B	REV.: 1	
DRAWN BY: EAW		
TOLERANCE: ±0.005	UNLESS OTHERWISE SPECIFIED	
TOLERANCE HELD AFTER PLATING	ALL DIMENSIONS ARE IN INCHES	
MATL.: STEEL	QTY.: 2	
FINISH:	SHEET 1 OF 1	

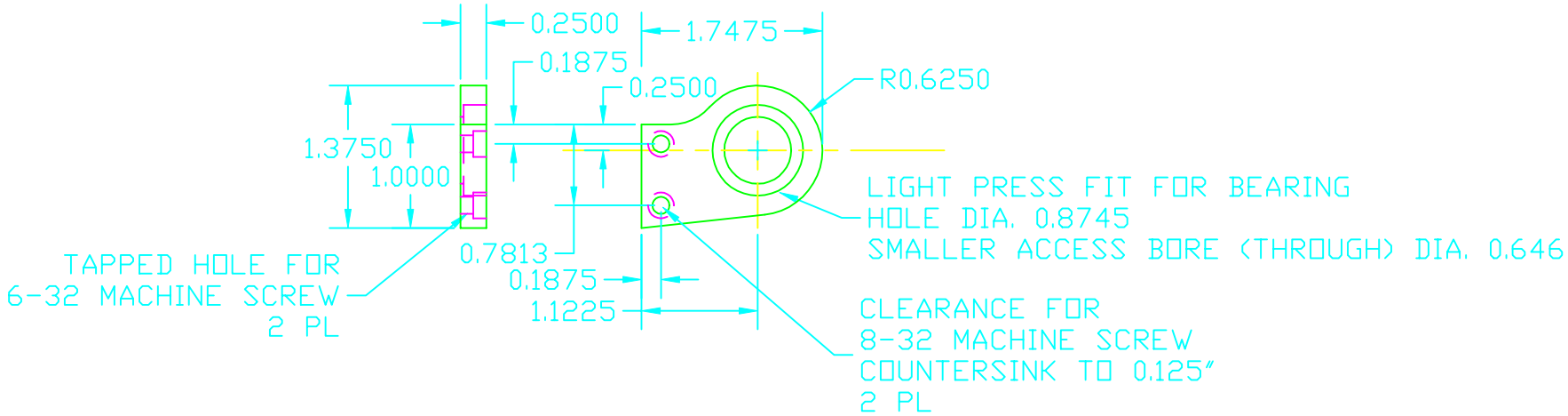

NOTE: SAME PROFILE
AS BEVEL_PLATE_HORIZ2

NAME: STOP_PINION_PLATE.DWG		
SCALE: FULL	DATE: 12-2-99	PART #: 4357.1
SHEET SIZE: B	REV.: 1	
DRAWN BY: EAW		
TOLERANCE: ±0.005	UNLESS OTHERWISE SPECIFIED	
TOLERANCE HELD AFTER PLATING	ALL DIMENSIONS ARE IN INCHES	
MATL.: MONEL	QTY.: 1	
FINISH:		SHEET 1 OF 1

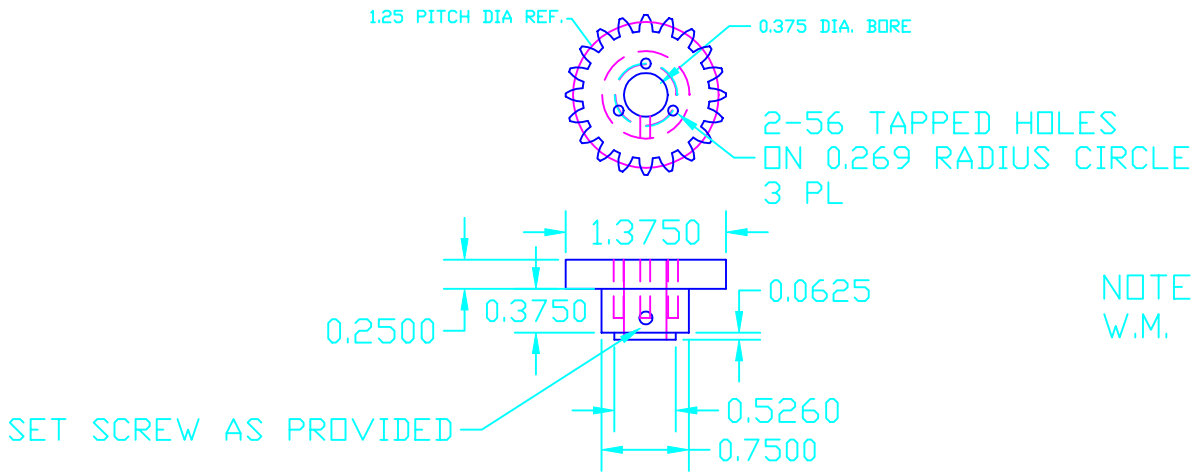

NOTE: MODIFIED FROM STANDARD
W.M. BERG PART #P16S36-20

16 DIAMETRAL PITCH
20 DEGREE PRESSURE ANGLE
STD ANSI INVOLUTE SPUR GEAR

NAME: STOP_PINION_20T.DWG		
SCALE: FULL	DATE: 11-30-99	PART #: 4055.1
SHEET SIZE: B	REV.: 1	
DRAWN BY: EAW/JWS		
TOLERANCE: AGMA QUALITY #10 BACKLASH CLASS C	OTHER DIMS +/- 0.003 UNLESS OTHERWISE SPECIFIED	
TOLERANCE HELD AFTER PLATING	ALL DIMENSIONS ARE IN INCHES	
MATL.: BRASS/STAINLESS STEEL	QTY.: 1	
FINISH:		SHEET 1 OF 1

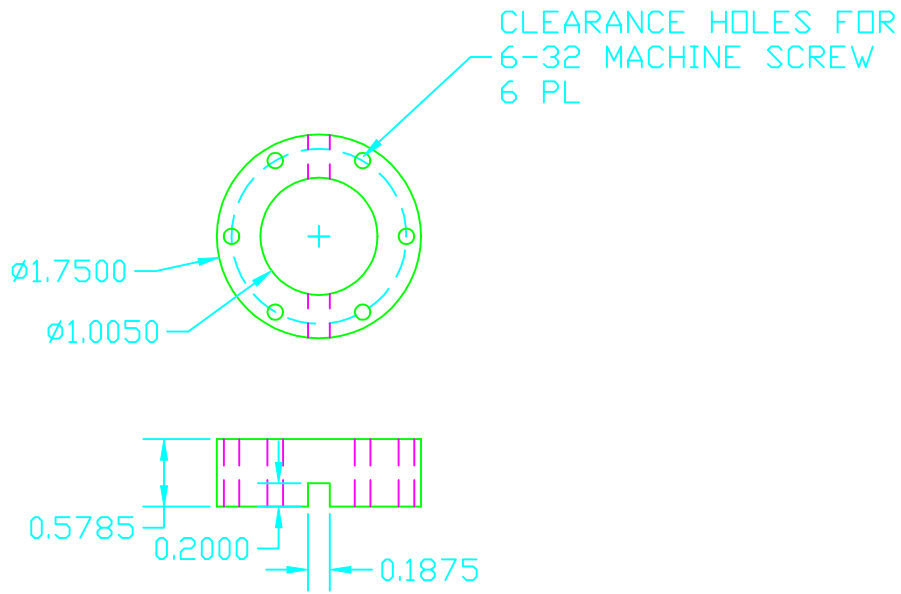

NAME: STOP_GEAR_HUB.DWG		
SCALE: FULL	DATE: 12-2-99	PART #: 4055.1
SHEET SIZE: B	REV.: 1	
DRAWN BY: EAW		
TOLERANCE: ±0.005	UNLESS OTHERWISE SPECIFIED	
TOLERANCE HELD AFTER PLATING	ALL DIMENSIONS ARE IN INCHES	
MATL.: MONEL	QTY.: 1	
FINISH:	SHEET 1 OF 1	

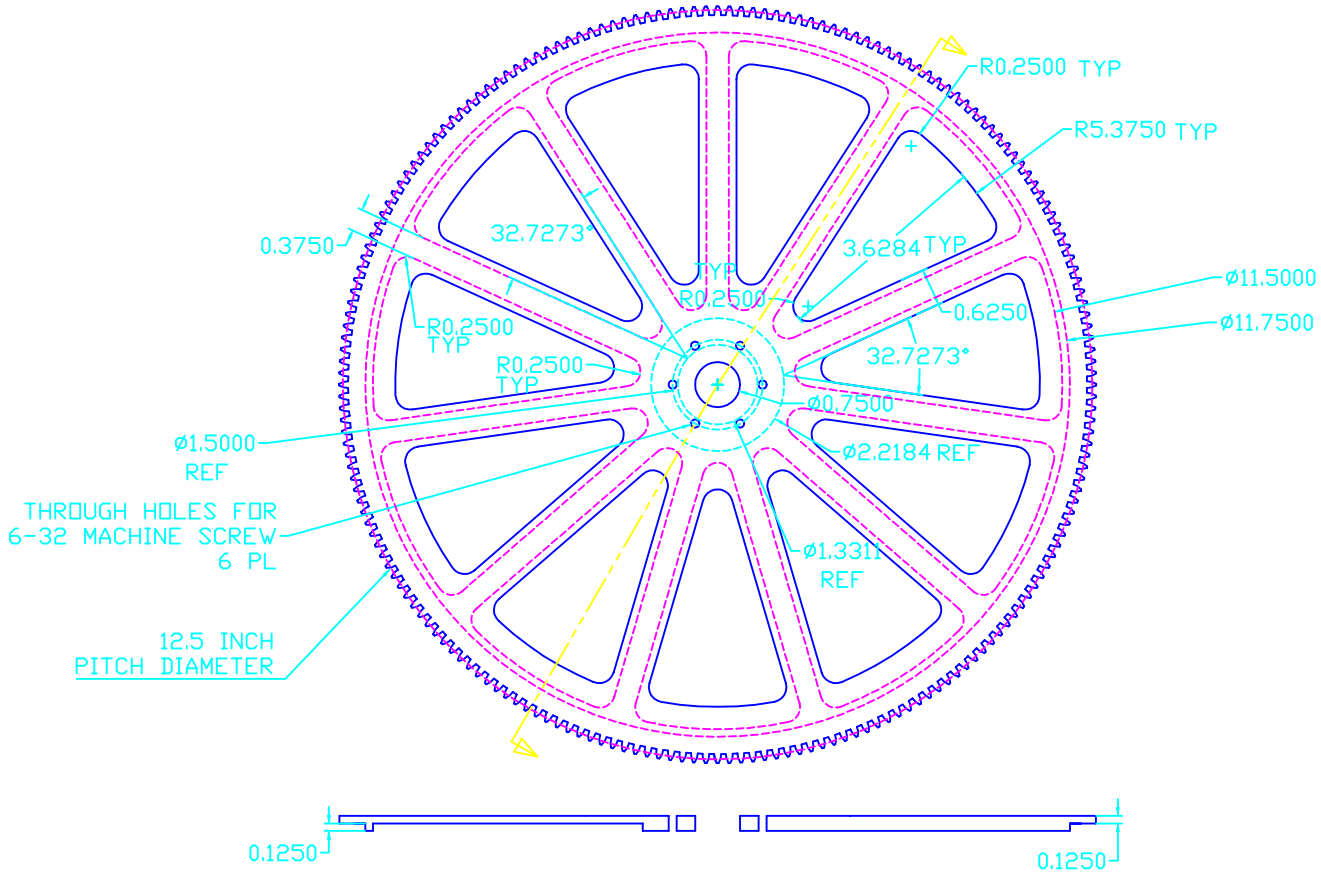

16 DIAMETRAL PITCH
20 DEGREE PRESSURE ANGLE
STD ANSI INVOLUTE SPUR GEAR

NAME: STOP GEAR.DWG (200 TOOTH GEAR)		
SCALE: FULL	DATE: 1-27-00	PART #: 4052.2
SHEET SIZE: D	REV.: 2	
DRAWN BY: DM/EAW		
TOLERANCE: AGMA QUALITY #10 BACKLASH CLASS C OTHER DIMS +/- 0.003	UNLESS OTHERWISE SPECIFIED	
TOLERANCE HELD AFTER PLATING	ALL DIMENSIONS ARE IN INCHES	
MATL.: BRASS	QTY.: 1	
FINISH:	SHEET 1 OF 1	

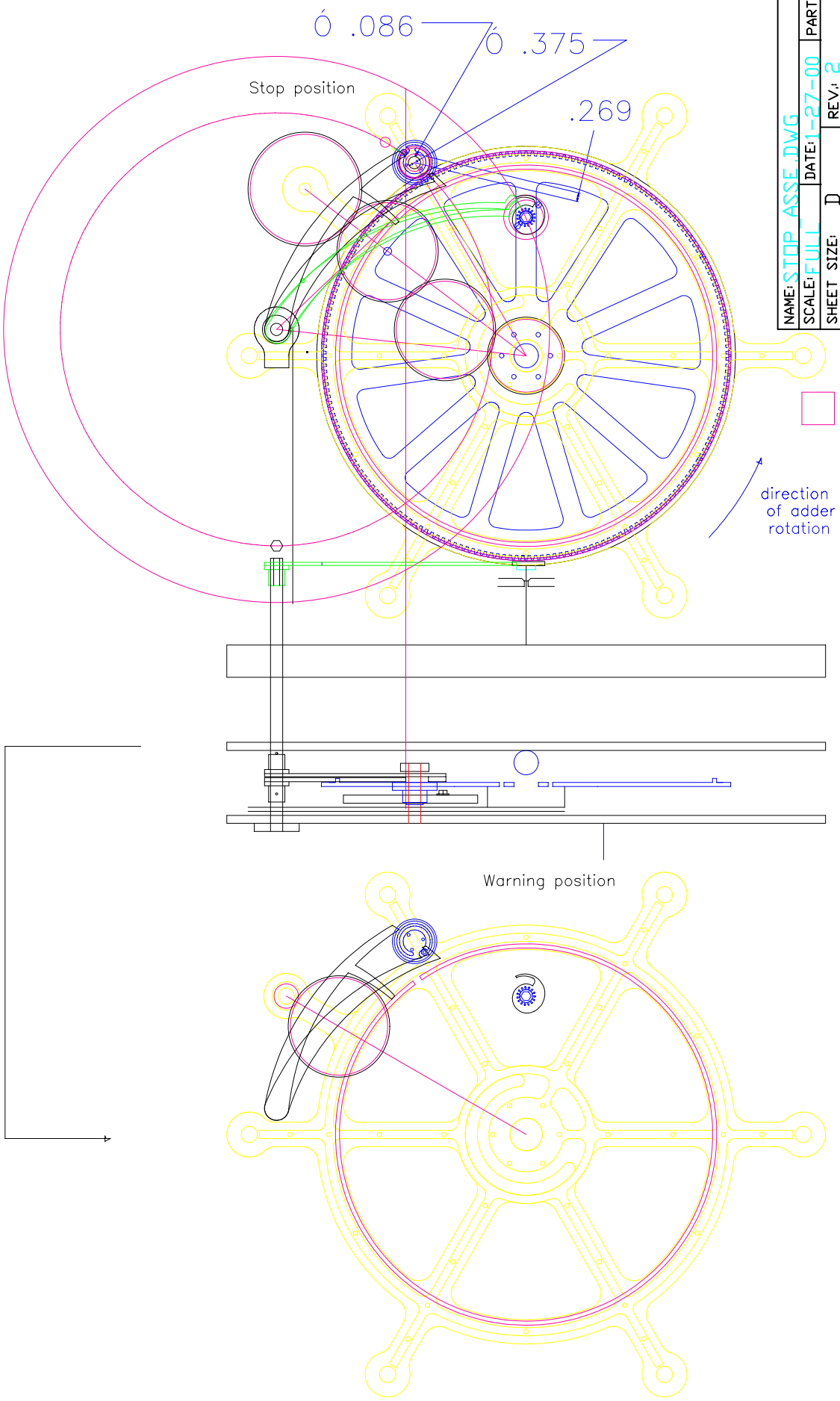

NAME:	STOP ASSE.DWG
SCALE:	FULL
DATE:	1-27-00
PART #:	
SHEET SIZE:	D
REV.:	2
DRAWN BY:	DM/EAW
TOLERANCE:	UNLESS OTHERWISE SPECIFIED
TOLERANCE HELD AFTER PLATING	ALL DIMENSIONS ARE IN INCHES
MATL.:	
QTY.:	1
FINISH:	
SHEET 1 OF 1	

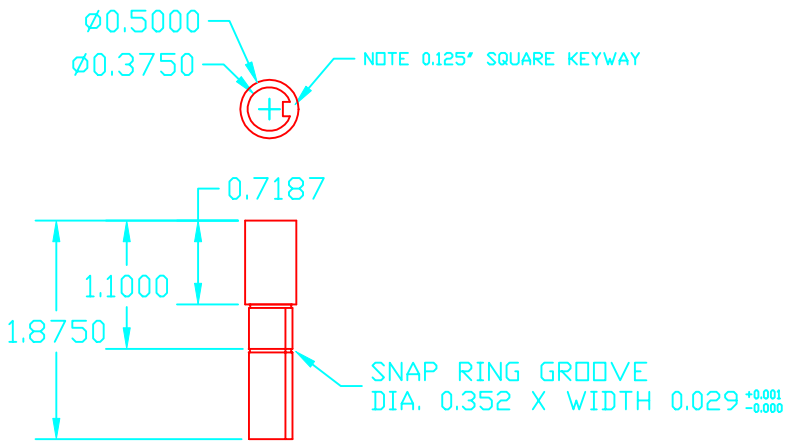

NAME: STARFIELD_SHAFT.DWG		
SCALE: FULL	DATE: 2-16-00	PART #: 4344.3
SHEET SIZE: B	REV.: 3	
DRAWN BY: EAW		
TOLERANCE: ±0.001	UNLESS OTHERWISE SPECIFIED	
TOLERANCE HELD AFTER PLATING	ALL DIMENSIONS ARE IN INCHES	
MATL.: COLD FINISHED OR GROUND STAINLESS STEEL BAR	QTY.: 1	
FINISH: GRIND AND CHAMFER ROD ENDS	SHEET 1 OF 1	

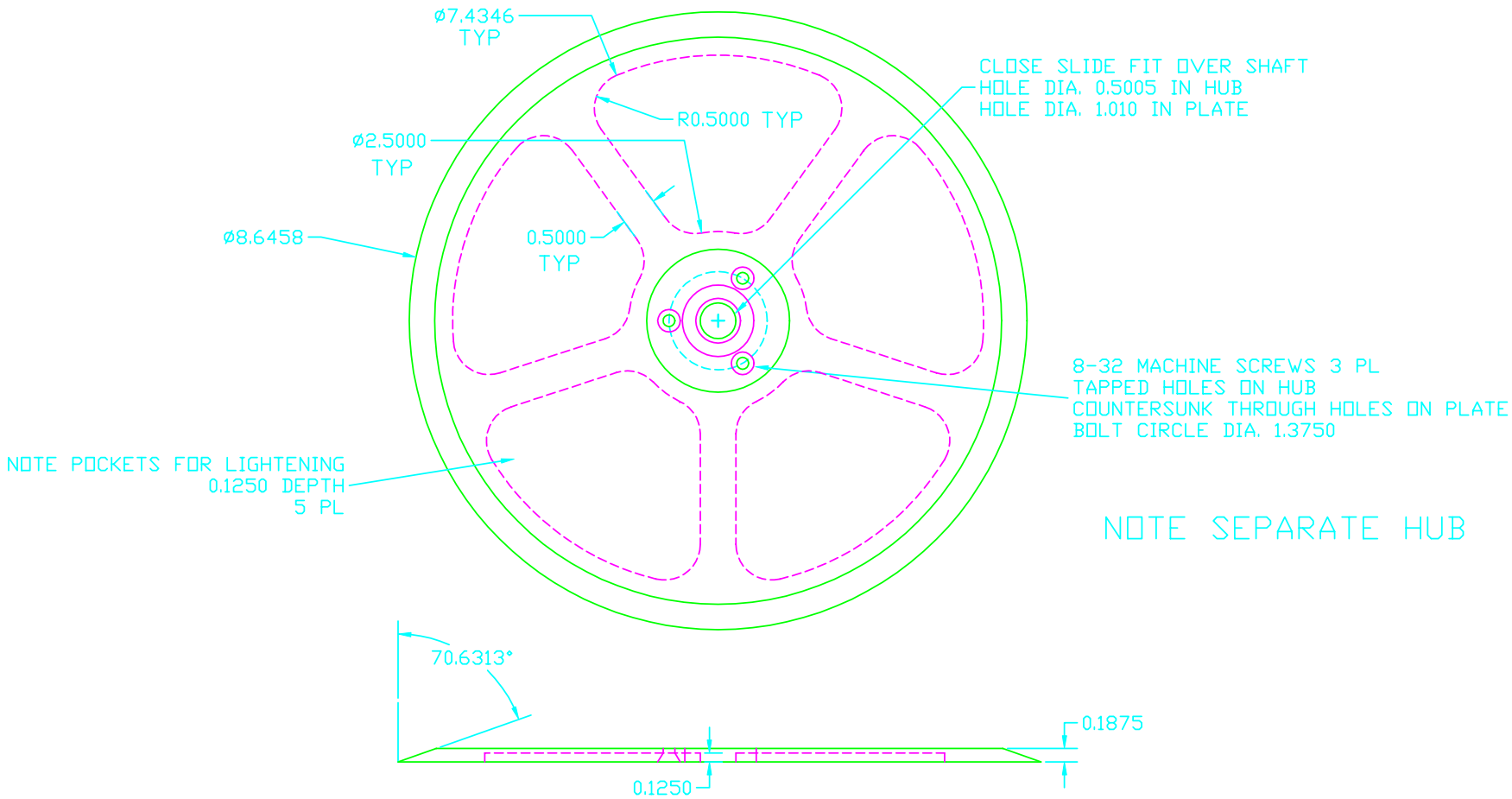

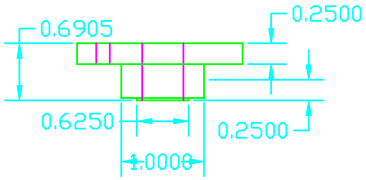

NAME: STARFIELD_MOUNT.DWG		
SCALE: FULL	DATE: 2-17-00	PART #: 4345.2
SHEET SIZE: C	REV.: 2	
DRAWN BY: EAW		
TOLERANCE: ±0.005	UNLESS OTHERWISE SPECIFIED	
TOLERANCE HELD AFTER PLATING	ALL DIMENSIONS ARE IN INCHES	
MATL.: BRASS	QTY.: 1	
FINISH: DEBURR EDGES	SHEET 1 OF 1	

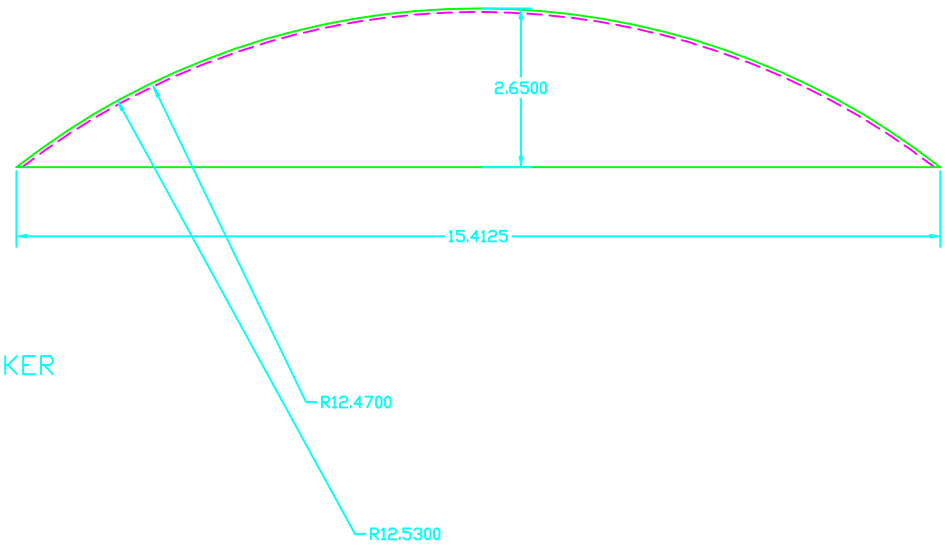

THIN PARABOLIC SHELL
THICKNESS 0.125 OR THICKER
AS NECESSARY FOR
FABRICATION

NAME: STARFIELD.DWG		
SCALE: FULL	DATE: 9-27-99	PART #: 4346.2
SHEET SIZE: D	REV.: 2	
DRAWN BY: EAW		
TOLERANCE: ±0.005	UNLESS OTHERWISE SPECIFIED	
TOLERANCE HELD AFTER PLATING	ALL DIMENSIONS ARE IN INCHES	
MATL.: BRASS	QTY.: 1	
FINISH:	SHEET 1 OF 1	

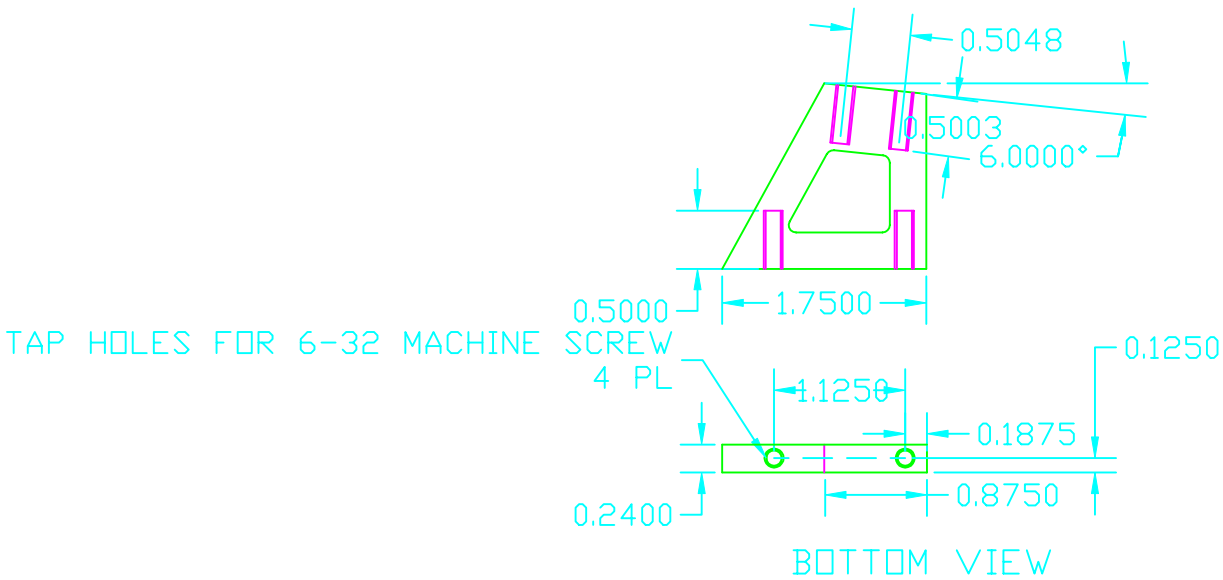

NAME: STAR_VERTICAL_SUPPORT.DWG		
SCALE: FULL	DATE: 2-15-00	PART #: 4342.3
SHEET SIZE: B	REV.: 3	
DRAWN BY: EAW		
TOLERANCE: ±0.005	UNLESS OTHERWISE SPECIFIED	
TOLERANCE HELD AFTER PLATING	ALL DIMENSIONS ARE IN INCHES	
MATL.: MONEL	QTY.: 2	
FINISH:	SHEET 1 OF 1	

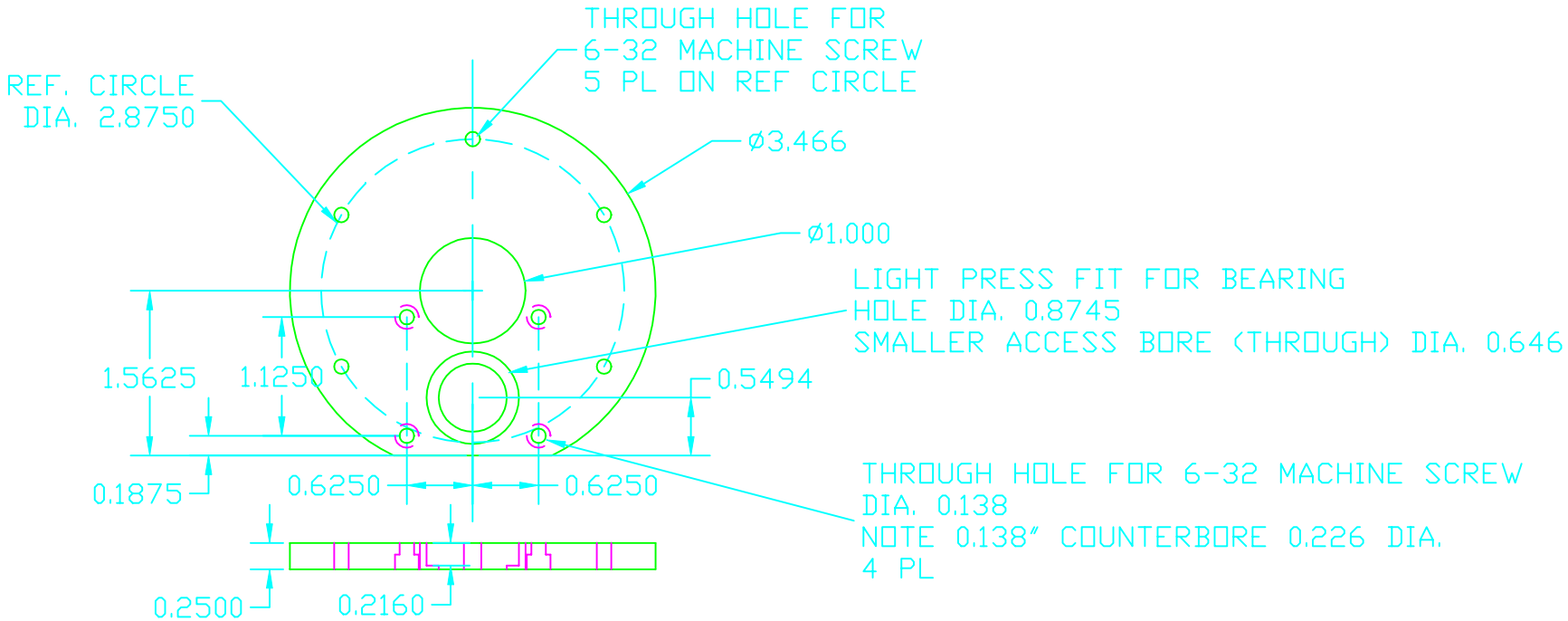

NAME: STAR_MOUNTING_PLATE.DWG		
SCALE: FULL	DATE: 7-23-99	PART #: 4341.3
SHEET SIZE: B	REV.: 3	
DRAWN BY: EAW		
TOLERANCE: ±0.005	UNLESS OTHERWISE SPECIFIED	
TOLERANCE HELD AFTER PLATING	ALL DIMENSIONS ARE IN INCHES	
MATL.: MONEL	QTY.: 1	
FINISH:	SHEET 1 OF 1	

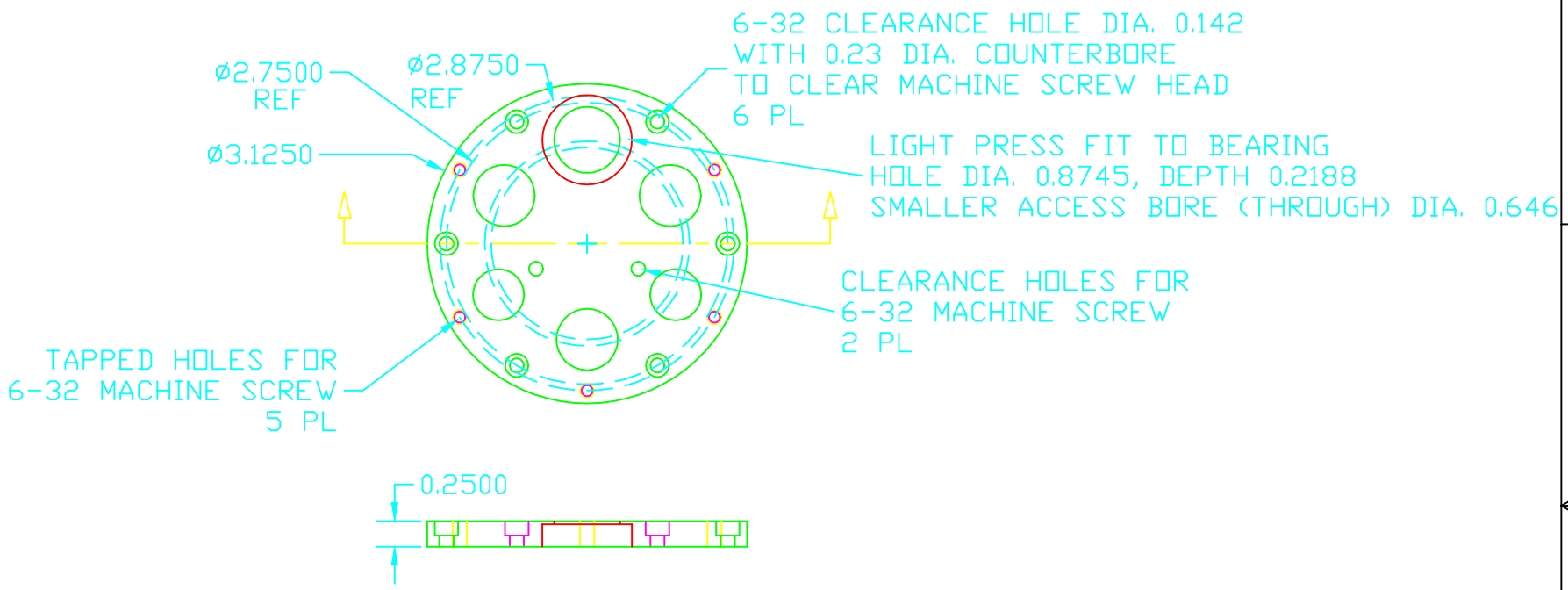

NOTE: SOME DIMENSIONS
OMITTED DUE TO COMPLEXITY
DRAWING IS TO SCALE

NAME: STAR_LOWER_MTG_PLATE.DWG		
SCALE: FULL	DATE: 7-26-99	PART #: 4348.1
SHEET SIZE: B	REV.: 1	
DRAWN BY: EAW		
TOLERANCE: ±0.005	UNLESS OTHERWISE SPECIFIED	
TOLERANCE HELD AFTER PLATING	ALL DIMENSIONS ARE IN INCHES	
MATL.: MONEL	QTY.: 1	
FINISH:	SHEET 1 OF 1	

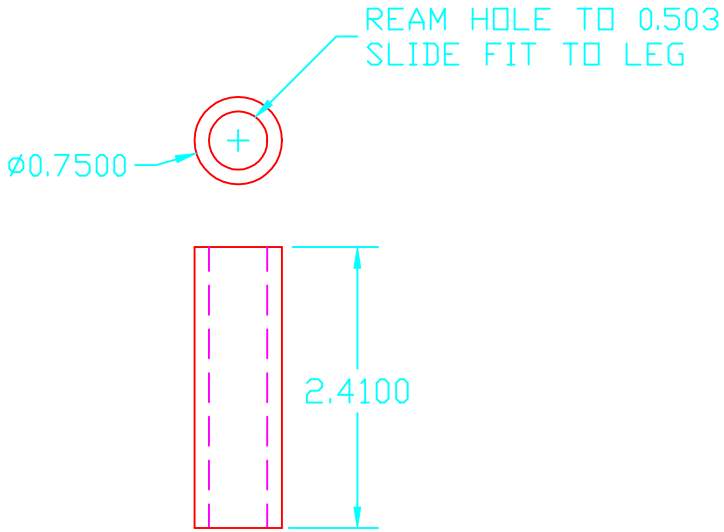

NAME: STAR_LEG_SPACER.DWG		
SCALE: FULL	DATE: 9-27-99	PART #: 4405.2
SHEET SIZE: B	REV.: 2	
DRAWN BY: EAW/JWS		
TOLERANCE: ±0.003	UNLESS OTHERWISE SPECIFIED	
TOLERANCE HELD AFTER PLATING	ALL DIMENSIONS ARE IN INCHES	
MATL.: STAINLESS STEEL	QTY.: 6	
FINISH:	SHEET 1 OF 1	

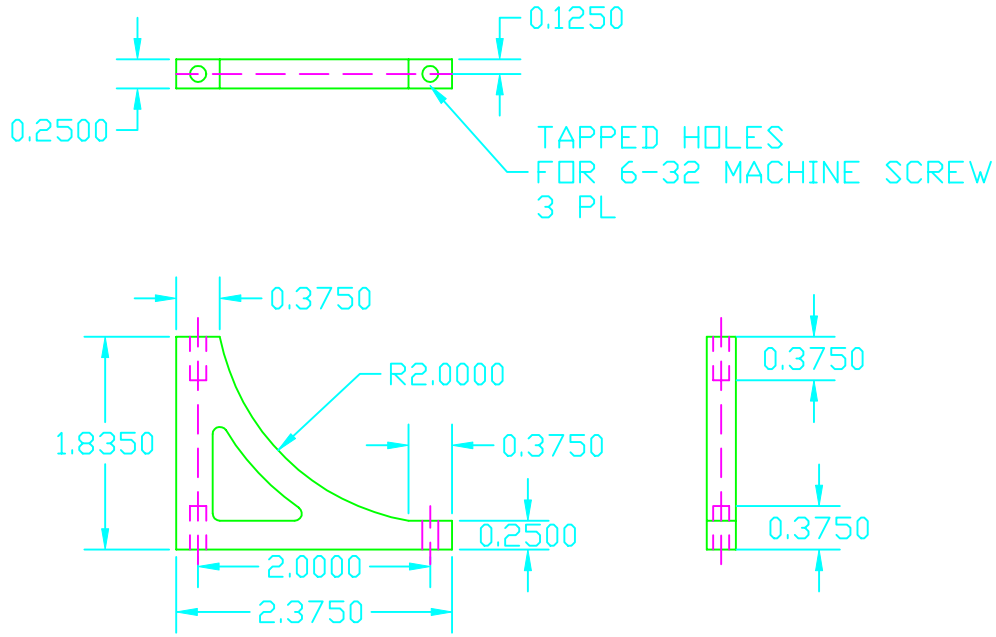

NAME: STAR_GUSSET.DWG		
SCALE: FULL	DATE: 7-23-99	PART #: 4403.1
SHEET SIZE: B	REV.: 1	
DRAWN BY: EAW		
TOLERANCE: ±0.005	UNLESS OTHERWISE SPECIFIED	
TOLERANCE HELD AFTER PLATING	ALL DIMENSIONS ARE IN INCHES	
MATL.: MONEL	QTY.: 6	
FINISH:	SHEET 1 OF 1	

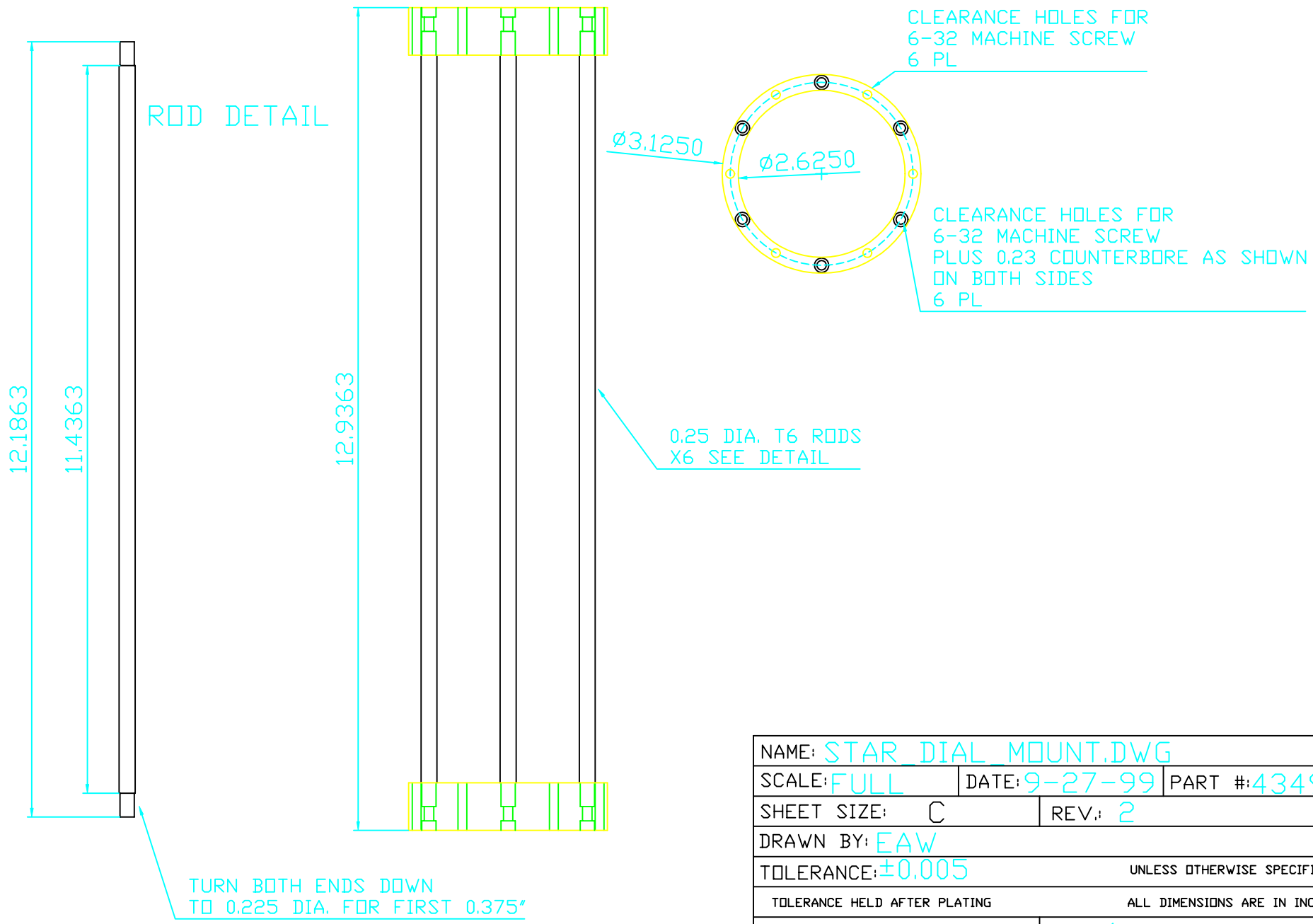

NAME: STAR_DIAL_MOUNT.DWG		
SCALE: FULL	DATE: 9-27-99	PART #: 4349.2
SHEET SIZE: C	REV.: 2	
DRAWN BY: EAW		
TOLERANCE: ±0.005	UNLESS OTHERWISE SPECIFIED	
TOLERANCE HELD AFTER PLATING	ALL DIMENSIONS ARE IN INCHES	
MATL.: 7075 AL RODS, 6061 PLATES	QTY.: 1	
FINISH:	SHEET 1 OF 1	

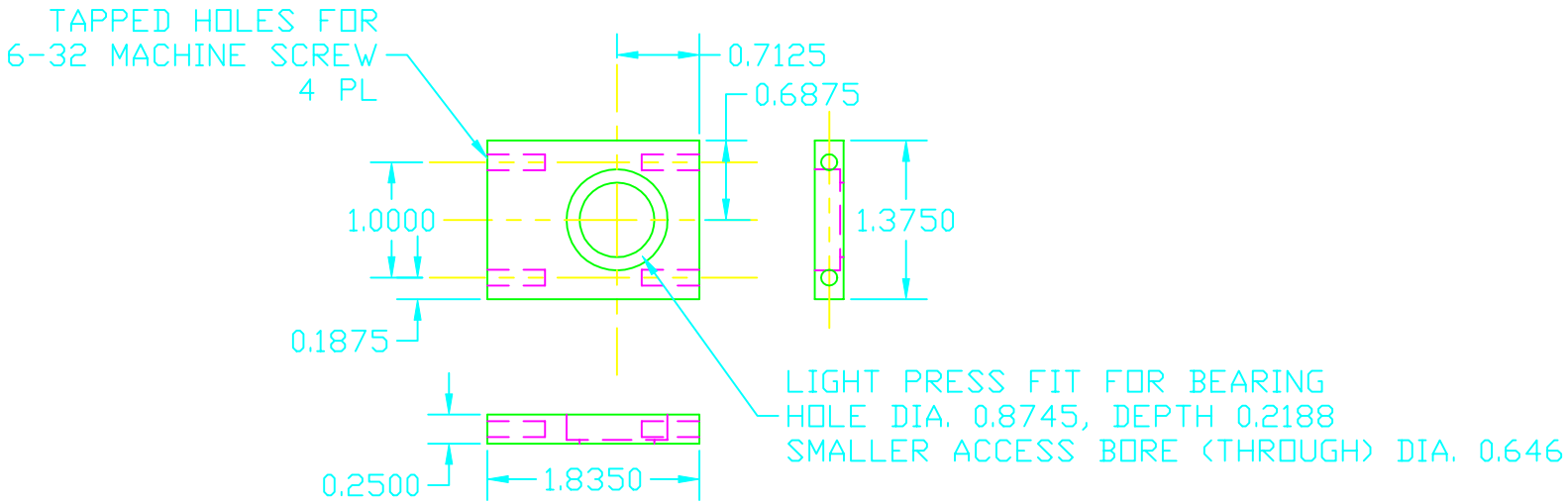

NAME: STAR_BEVEL_PLATE.DWG		
SCALE: FULL	DATE: 7-26-99	PART #: 4404.1
SHEET SIZE: B	REV.: 1	
DRAWN BY: EAW		
TOLERANCE: ±0.005	UNLESS OTHERWISE SPECIFIED	
TOLERANCE HELD AFTER PLATING	ALL DIMENSIONS ARE IN INCHES	
MATL.: MONEL	QTY.: 1	
FINISH:	SHEET 1 OF 1	

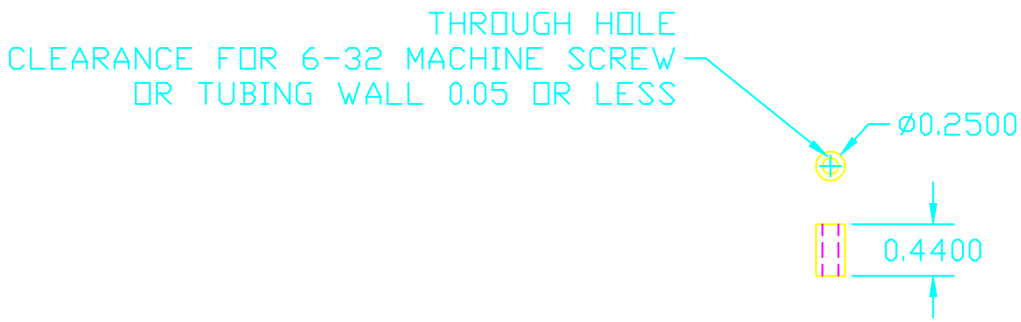

NAME: STAR_BEARING_SUPPORT.DWG		
SCALE: FULL	DATE: 7-23-99	PART #: 4347.1
SHEET SIZE: B	REV.: 1	
DRAWN BY: EAW		
TOLERANCE: ±0.003	UNLESS OTHERWISE SPECIFIED	
TOLERANCE HELD AFTER PLATING	ALL DIMENSIONS ARE IN INCHES	
MATL.: STAINLESS STEEL TUBING	QTY.: 4	
FINISH:	SHEET 1 OF 1	

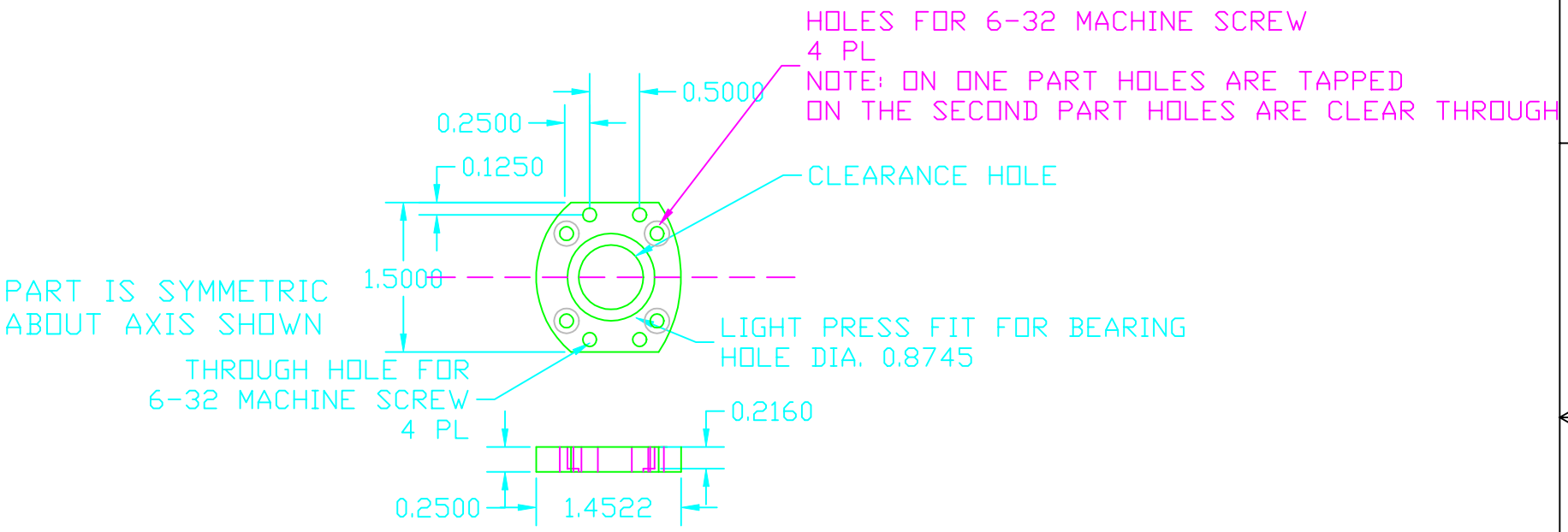

NAME: STAR_BEARING_PLATE.DWG		
SCALE: FULL	DATE: 7-23-99	PART #: 4343.2
SHEET SIZE: B	REV.: 2	
DRAWN BY: EAW		
TOLERANCE: ±0.005	UNLESS OTHERWISE SPECIFIED	
TOLERANCE HELD AFTER PLATING	ALL DIMENSIONS ARE IN INCHES	
MATL.: MONEL	QTY.: 2 SEE NOTE	
FINISH:	SHEET 1 OF 1	

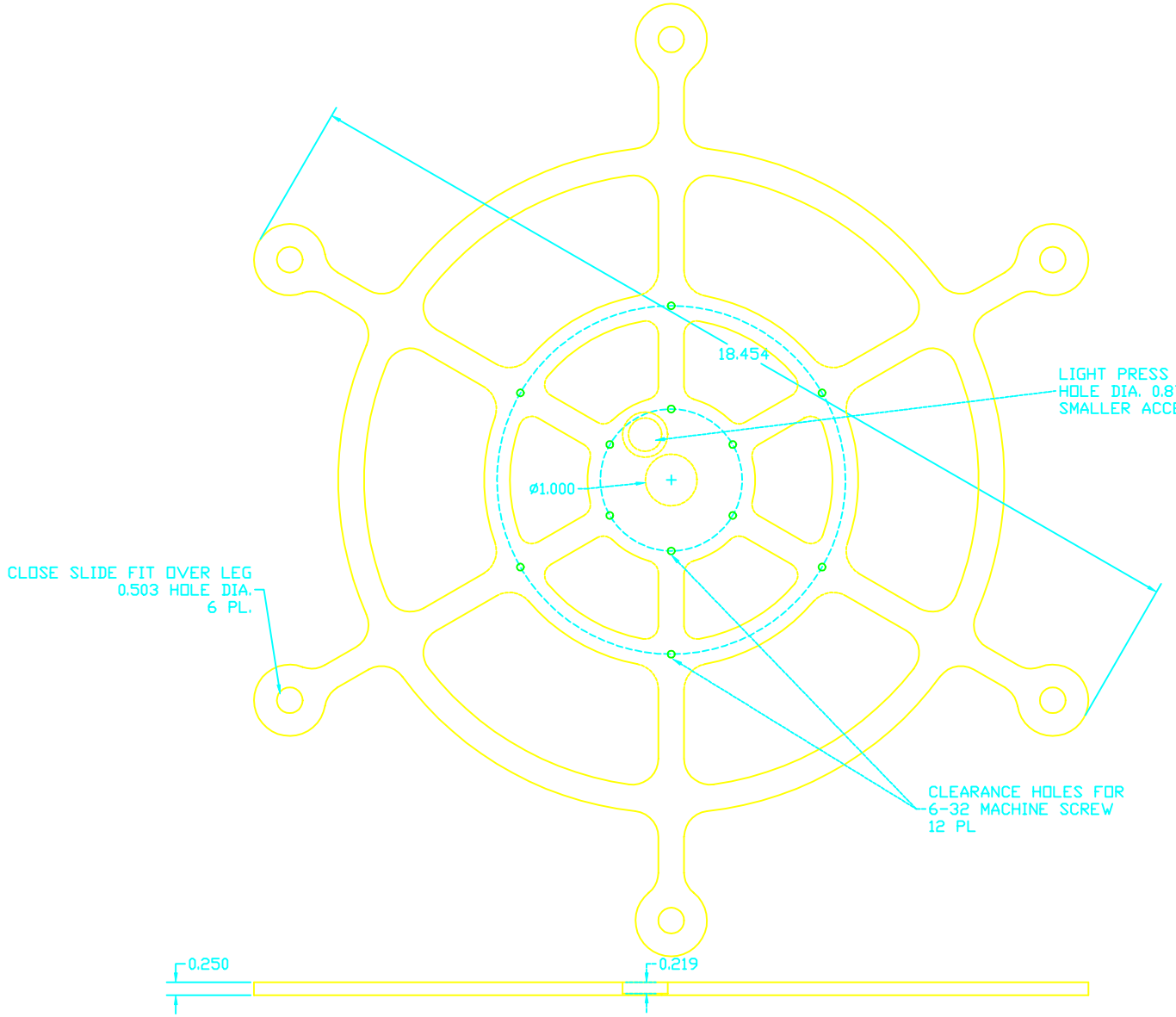

NOTE:
DIMENSIONS OMITTED DUE TO
COMPLEXITY OF DESIGN.
SOME DIMENSIONS GIVEN AS REFERENCE.
DRAWING IS TO SCALE.

NAME: STAR_BASE_PLATE.DWG		
SCALE: FULL	DATE: 9-27-99	PART #: 4402.2
SHEET SIZE: D	REV.: 2	
DRAWN BY: EAW/JWS		
TOLERANCE: ±0.005	UNLESS OTHERWISE SPECIFIED	
TOLERANCE HELD AFTER PLATING	ALL DIMENSIONS ARE IN INCHES	
MATL.: MONEL	QTY.: 1	
FINISH:	SHEET 1 OF 1	

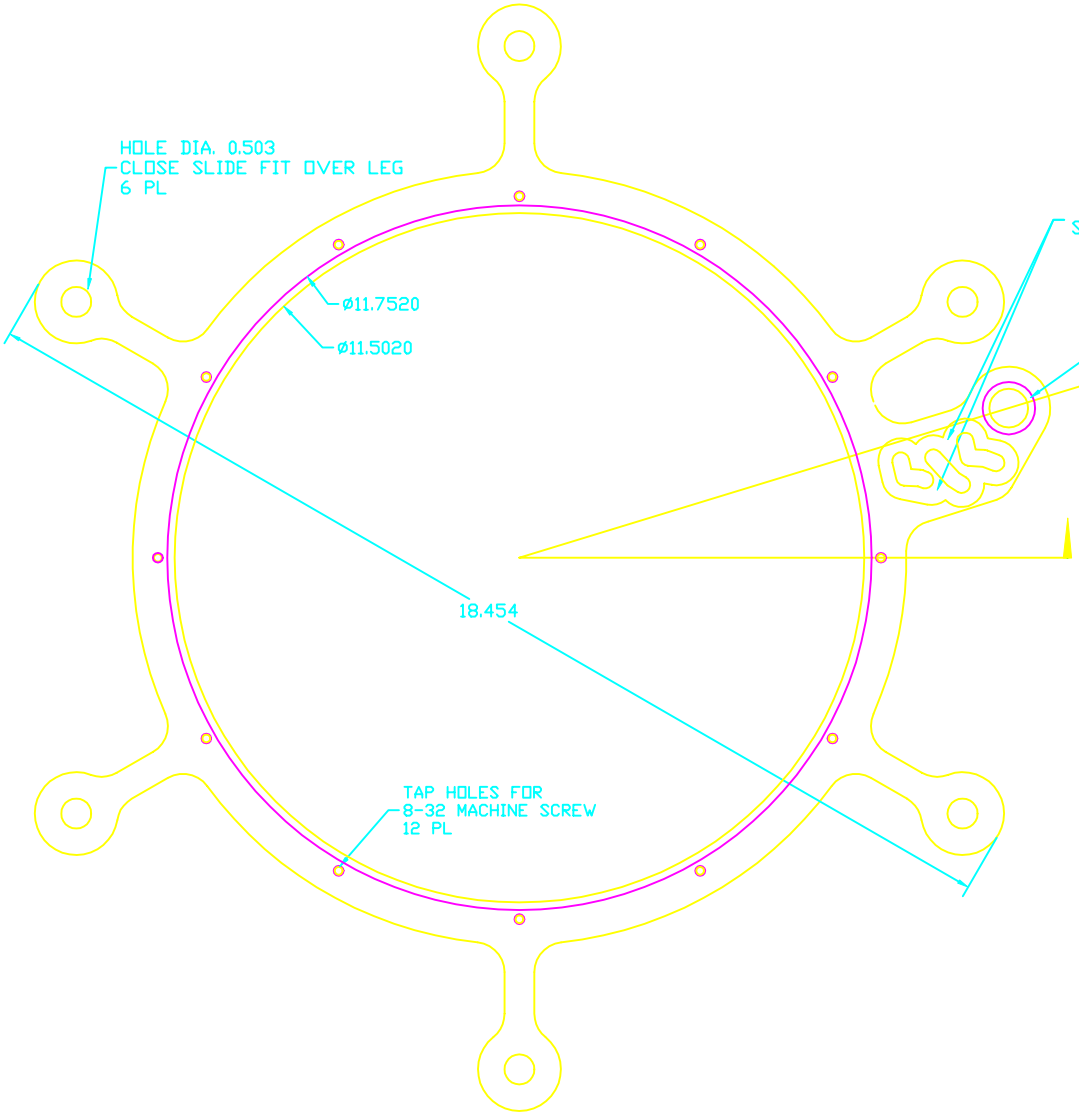

NOTE:
SOME DIMENSIONS OMITTED
DUE TO COMPLEXITY OF DRAWING.
OVERALL DIMENSIONS GIVEN
AS REFERENCE.
DRAWING IS TO SCALE.

NAME: SR+SS_GEAR_MOUNT_PLATE.DWG		
SCALE: FULL	DATE: 4-6-99	PART #: 4314.2
SHEET SIZE: D	REV.: 2	
DRAWN BY: EAW/JWS		
TOLERANCE: ±0.005		UNLESS OTHERWISE SPECIFIED
TOLERANCE HELD AFTER PLATING		ALL DIMENSIONS ARE IN INCHES
MATL.: MONEL	QTY.: 2	
FINISH:		SHEET 1 OF 1

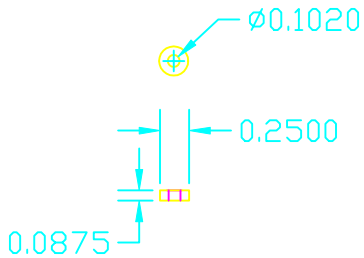

NAME: SPRING_SPACER.DWG		
SCALE: FULL	DATE: 8-25-98	PART #: 4327.1
SHEET SIZE: B	REV.: 1	
DRAWN BY: EAW		
TOLERANCE: ±0.003	UNLESS OTHERWISE SPECIFIED	
TOLERANCE HELD AFTER PLATING	ALL DIMENSIONS ARE IN INCHES	
MATL.: STAINLESS STEEL	QTY.: 3	
FINISH: DEBURR EDGES		SHEET 1 OF 1

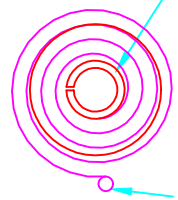

STRIP THICKNESS IS 0.01 IN.
TOTAL SPRING LENGTH IS 12.75 IN.
SPLIT COLLAR FIRMLY ATTACHED
TO INNER END OF SPRING

NAME: SPIRAL_SPRING.DWG		
SCALE: FULL	DATE: 2-10-99	PART #: 4326.2
SHEET SIZE: B	REV.: 2	
DRAWN BY: EAW		
TOLERANCE: ±0.005	UNLESS OTHERWISE SPECIFIED	
TOLERANCE HELD AFTER PLATING	ALL DIMENSIONS ARE IN INCHES	
MATL.: BERYLLIUM COPPER	QTY.: 3	
FINISH: AS PROVIDED BY MFR		SHEET 1 OF 1

ALL UNLABELED HOLES USED FOR LIGHTENING PURPOSES

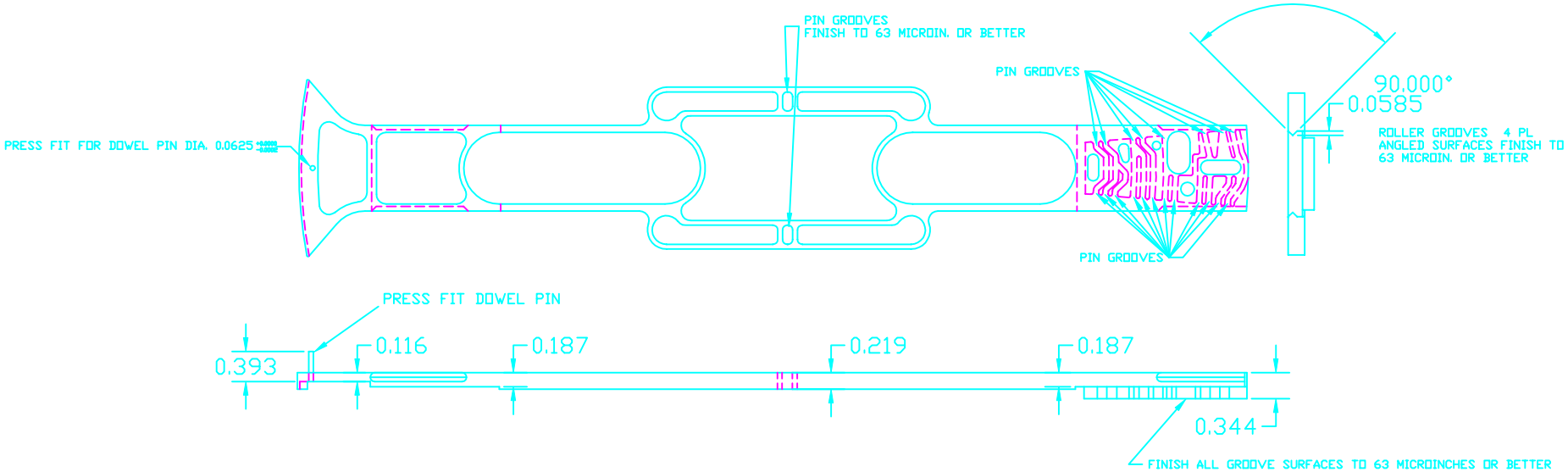

SOME DIMENSIONS NOT INCLUDED
DUE TO COMPLEXITY OF DRAWING.
DRAWING IS TO SCALE

PIN FOR SLIDER
USE MCMASTER CARR 90145A418 DOWEL AS RAW MAT'L
NEED ONE PER SLIDER

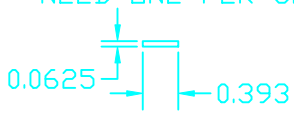

NAME: SLIDER_FINAL.DWG		
SCALE: FULL	DATE: 1-20-99	PART #: 4023.2
SHEET SIZE: C	REV.: 2	
DRAWN BY: EAW/JWS		
TOLERANCE: ±0.005	UNLESS OTHERWISE SPECIFIED	
TOLERANCE HELD AFTER PLATING	ALL DIMENSIONS ARE IN INCHES	
MATL.: 360 BRASS	QTY.: 5	
FINISH: FINISH TOP SURFACE PER DANNY HILLIS	SHEET 1 OF 1	

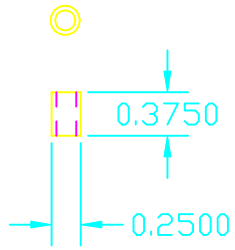

NAME: 90MIN_SPACER.DWG		
SCALE: FULL	DATE: 11-4-98	PART #: 4041.1
SHEET SIZE: B	REV.: 1	
DRAWN BY: EAW/JWS		
TOLERANCE: ±0.003	UNLESS OTHERWISE SPECIFIED	
TOLERANCE HELD AFTER PLATING	ALL DIMENSIONS ARE IN INCHES	
MATL.: STAINLESS STEEL TUBING 1/4 O.D. X 0.039 WALL	QTY.: 4	
FINISH:	SHEET 1 OF 1	

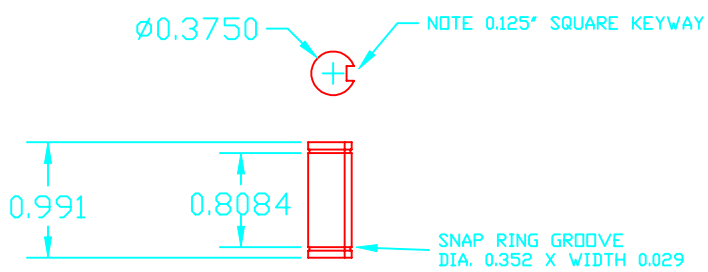

NAME: 90MIN_SHAFT.DWG		
SCALE: FULL	DATE: 11-4-98	PART #: 4044.1
SHEET SIZE: B	REV.: 1	
DRAWN BY: EAW		
TOLERANCE: ±0.001	UNLESS OTHERWISE SPECIFIED	
TOLERANCE HELD AFTER PLATING	ALL DIMENSIONS ARE IN INCHES	
MATL.: COLD FINISHED OR GROUND STAINLESS STEEL ROD	QTY.: 2	
FINISH: GRIND AND CHAMFER ROD ENDS	SHEET 1 OF 1	

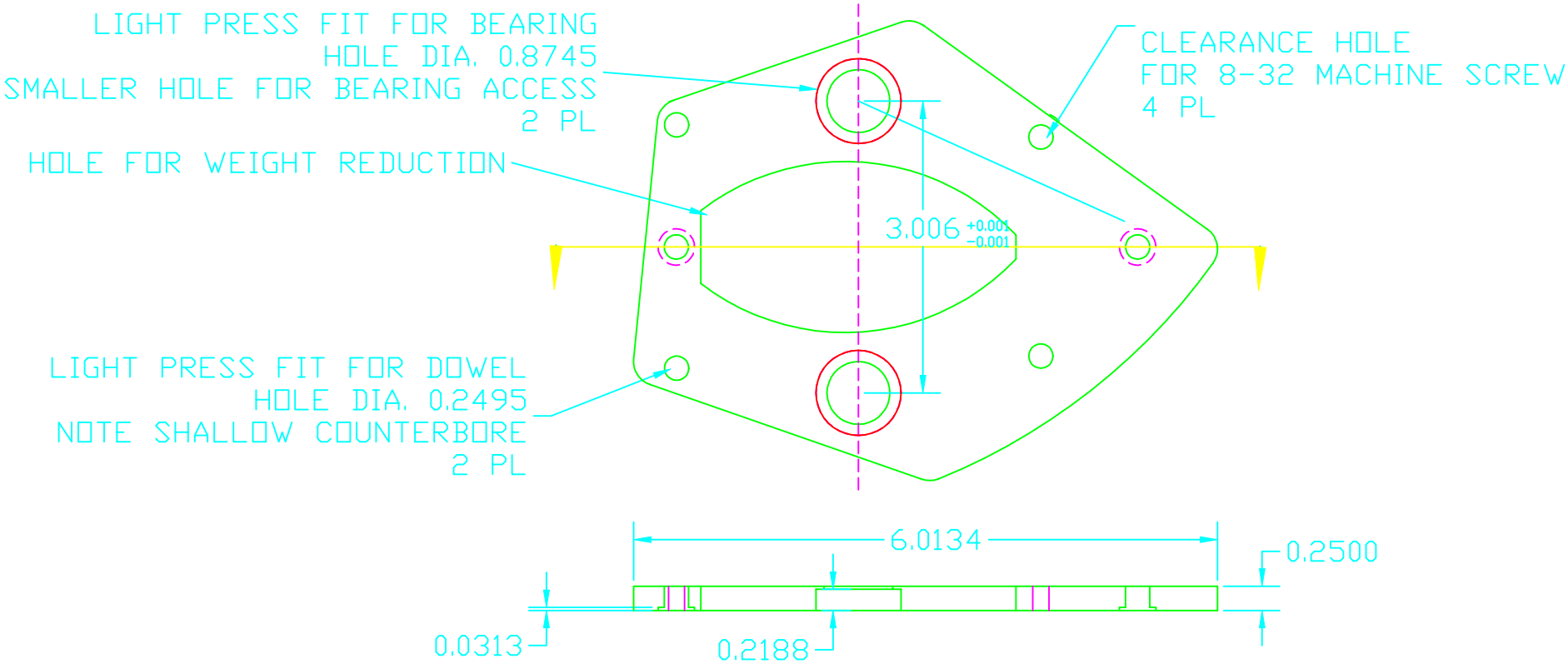

NOTE:
SOME DIMENSIONS OMITTED
DUE TO COMPLEXITY OF DRAWING.
OVERALL DIMENSIONS GIVEN
AS REFERENCE.
DRAWING IS TO SCALE.

NAME: 90MIN_GEAR_PLATE.DWG		
SCALE: FULL	DATE: 12-2-99	PART #: 4039.2
SHEET SIZE: B	REV.: 2	
DRAWN BY: EAW		
TOLERANCE: ±0.003	UNLESS OTHERWISE SPECIFIED	
TOLERANCE HELD AFTER PLATING	ALL DIMENSIONS ARE IN INCHES	
MATL.: MONEL	QTY.: 1	
FINISH:		SHEET 1 OF 1

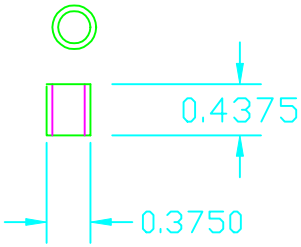

NAME: 90MIN_DOWEL_SPACER.DWG		
SCALE: FULL	DATE: 11-4-98	PART #: 4042.1
SHEET SIZE: B	REV.: 1	
DRAWN BY: EAW/JWS		
TOLERANCE: ±0.003	UNLESS OTHERWISE SPECIFIED	
TOLERANCE HELD AFTER PLATING	ALL DIMENSIONS ARE IN INCHES	
MATL.: STAINLESS STEEL TUBING 3/8 O.D. X 0.049 WALL	QTY.: 2	
FINISH:	SHEET 1 OF 1	

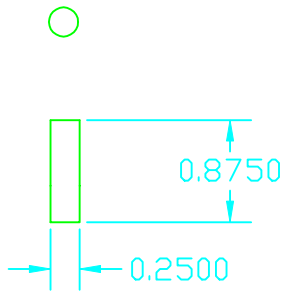

NAME: 90MIN_DOWEL.DWG		
SCALE: FULL	DATE: 11-4-98	PART #: 4043.1
SHEET SIZE: B	REV.: 1	
DRAWN BY: EAW		
TOLERANCE: ±0.003	UNLESS OTHERWISE SPECIFIED	
TOLERANCE HELD AFTER PLATING	ALL DIMENSIONS ARE IN INCHES	
MATL.: STAINLESS STEEL DOWEL	QTY.: 2	
FINISH: USE DOWEL PIN AS RAW MATERIAL GRIND MACHINED ENDS	SHEET 1 OF 1	

ROLLER BUSHING 1 #4019.2

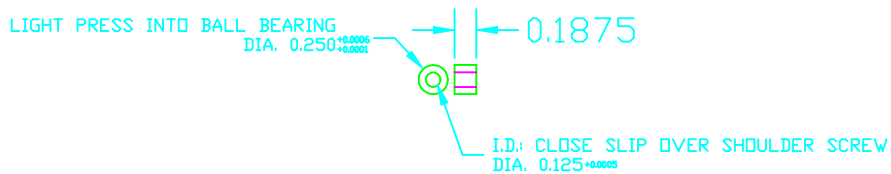

ROLLER BUSHING 2 #4021.2

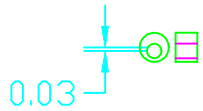

AS ABOVE BUT WITH ECCENTRIC CENTER HOLE.

NAME: ROLLER_BUSHINGS.DWG		
SCALE: FULL	DATE: 1-22-99	PART #: 4019.2,4021.2
SHEET SIZE: B	REV.: 2	
DRAWN BY: EAW/JWS		
TOLERANCE: ±0.003	UNLESS OTHERWISE SPECIFIED	
TOLERANCE HELD AFTER PLATING	ALL DIMENSIONS ARE IN INCHES	
MATL.: STAINLESS STEEL	QTY.: 13 OF EACH PART	
FINISH: BREAK EDGES, DEBURR	SHEET 1 OF 1	

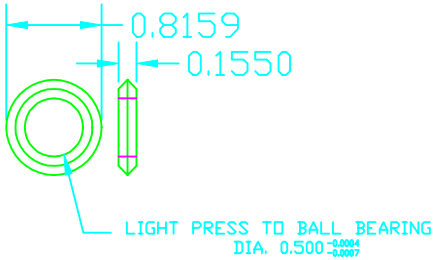

NAME: ROLLER.DWG		
SCALE: FULL	DATE: 7-13-98	PART #: 4022.1
SHEET SIZE: B	REV.: 1	
DRAWN BY: EAW/JWS		
TOLERANCE: ±0.001	UNLESS OTHERWISE SPECIFIED	
TOLERANCE HELD AFTER PLATING	ALL DIMENSIONS ARE IN INCHES	
MATL.: BRASS	QTY.: 26	
FINISH:	SHEET 1 OF 1	

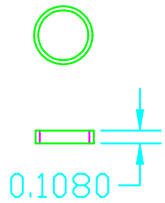

NAME: PULLEY_SPACER_2.DWG		
SCALE: FULL	DATE: 2-8-99	PART #: 4303.2
SHEET SIZE: B	REV.: 2	
DRAWN BY: EAW/JWS		
TOLERANCE: ±0.003	UNLESS OTHERWISE SPECIFIED	
TOLERANCE HELD AFTER PLATING	ALL DIMENSIONS ARE IN INCHES	
MATL.: STAINLESS STEEL TUBING 1/2 O.D. X 0.035 WALL	QTY.: 2	
FINISH:	SHEET 1 OF 1	

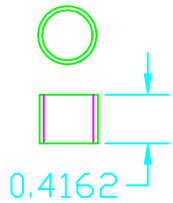

NAME: PULLEY_SPACER_1.DWG		
SCALE: FULL	DATE: 8-25-98	PART #: 4302.1
SHEET SIZE: B	REV.: 1	
DRAWN BY: EAW/JWS		
TOLERANCE: ±0.003	UNLESS OTHERWISE SPECIFIED	
TOLERANCE HELD AFTER PLATING	ALL DIMENSIONS ARE IN INCHES	
MATL.: STAINLESS STEEL TUBING 1/2 O.D. X 0.035 WALL	QTY.: 2	
FINISH:	SHEET 1 OF 1	

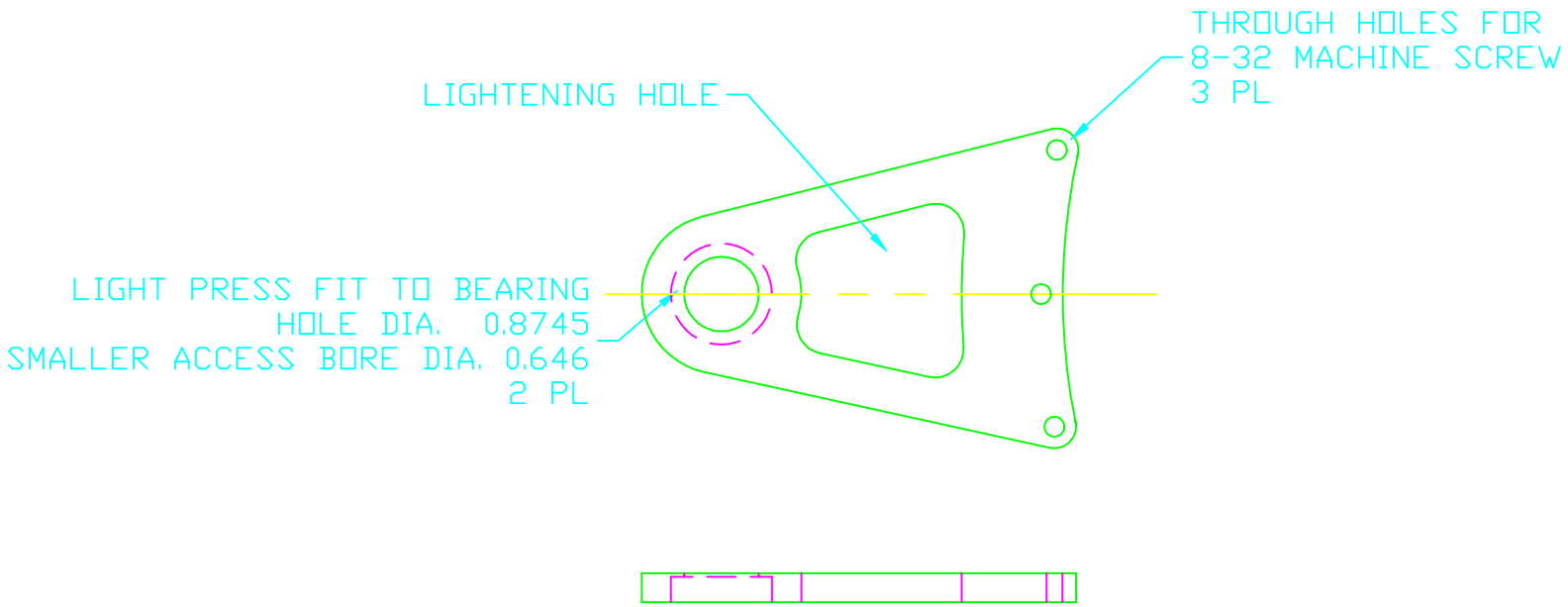

NAME: POWER_COUPLING_PLATE.DWG		
SCALE: FULL	DATE: 11-3-99	PART #: 4461.2
SHEET SIZE: B	REV.: 2	
DRAWN BY: EAW		
TOLERANCE: ±0.005	UNLESS OTHERWISE SPECIFIED	
TOLERANCE HELD AFTER PLATING	ALL DIMENSIONS ARE IN INCHES	
MATL.: MONEL	QTY.: 1	
FINISH:		SHEET 1 OF 1

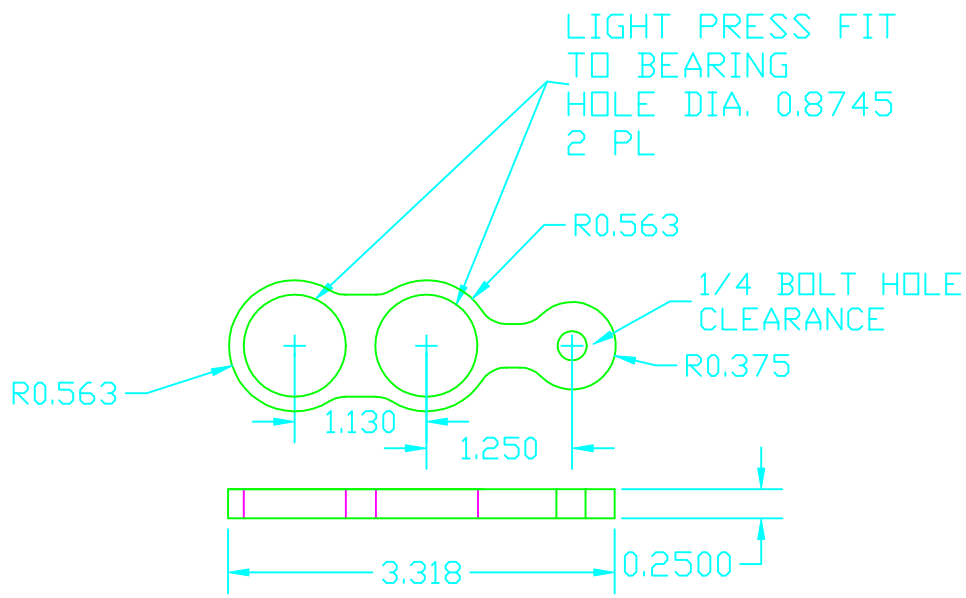

NAME: PLANET_SPACER_ARM.DWG		
SCALE: FULL	DATE: 3-9-99	PART #: 4305.3
SHEET SIZE: B	REV.: 3	
DRAWN BY: EAW		
TOLERANCE: ±0.003	UNLESS OTHERWISE SPECIFIED	
TOLERANCE HELD AFTER PLATING	ALL DIMENSIONS ARE IN INCHES	
MATL.: MONEL/STAINLESS STEEL	QTY.: 2	
FINISH: DEBURR EDGES		SHEET 1 OF 1

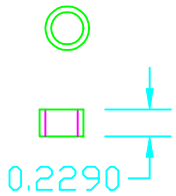

NAME: PLANET_SPACER.DWG		
SCALE: FULL	DATE: 8-25-98	PART #: 4306.1
SHEET SIZE: B	REV.: 1	
DRAWN BY: EAW/JWS		
TOLERANCE: ±0.003	UNLESS OTHERWISE SPECIFIED	
TOLERANCE HELD AFTER PLATING	ALL DIMENSIONS ARE IN INCHES	
MATL.: STAINLESS STEEL TUBING 3/8 O.D. X 0.049 WALL	QTY.: 2	
FINISH:	SHEET 1 OF 1	

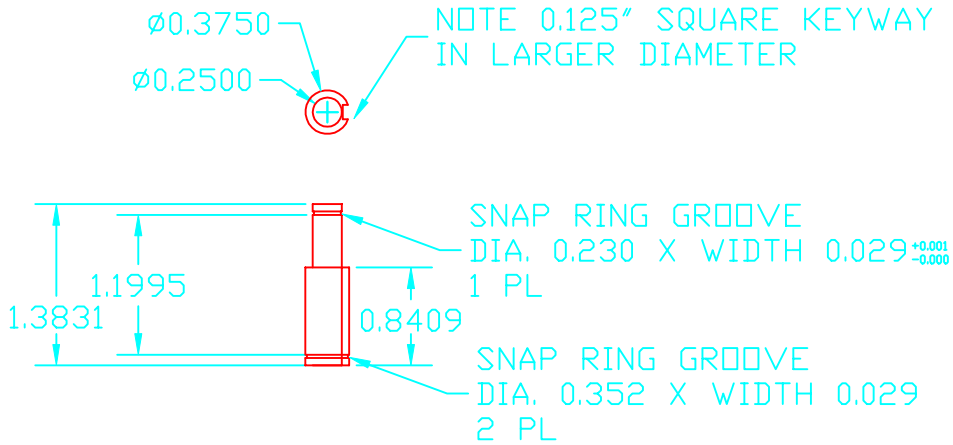

NAME: PLANET_SHAFT.DWG		
SCALE: FULL	DATE: 2-11-99	PART #: 4304.3
SHEET SIZE: B	REV.: 3	
DRAWN BY: EAW		
TOLERANCE: ±0.001	UNLESS OTHERWISE SPECIFIED	
TOLERANCE HELD AFTER PLATING	ALL DIMENSIONS ARE IN INCHES	
MATL.: STAINLESS STEEL ROD	QTY.: 2	
FINISH: GRIND AND CHAMFER ENDS		SHEET 1 OF 1

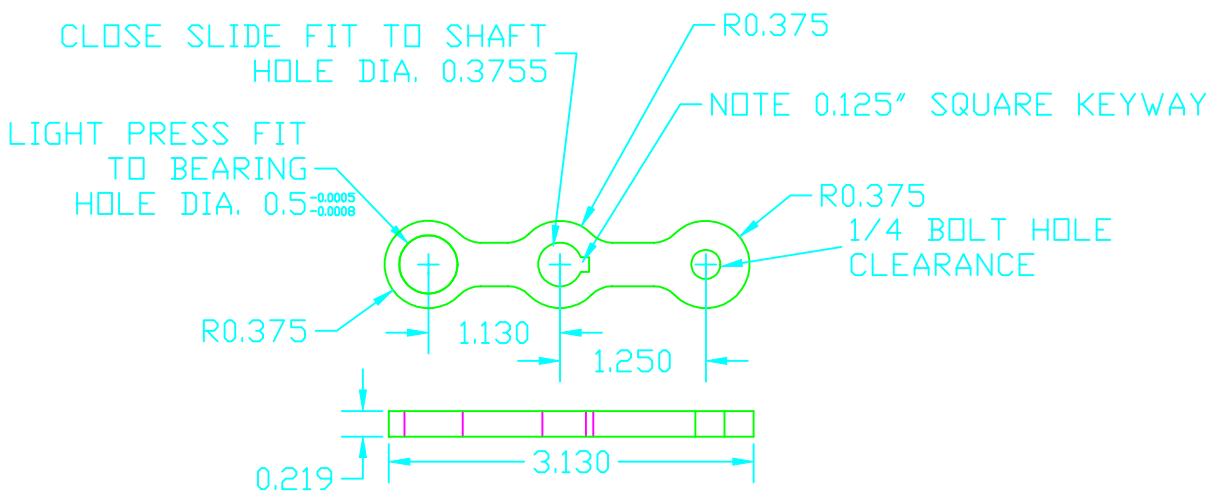

NAME: PLANET_DRIVER_ARM.DWG		
SCALE: FULL	DATE: 3-9-99	PART #: 4307.2
SHEET SIZE: B	REV.: 2	
DRAWN BY: EAW		
TOLERANCE: ±0.003	UNLESS OTHERWISE SPECIFIED	
TOLERANCE HELD AFTER PLATING	ALL DIMENSIONS ARE IN INCHES	
MATL.: MONEL/STAINLESS STEEL	QTY.: 2	
FINISH: DEBURR EDGES		SHEET 1 OF 1

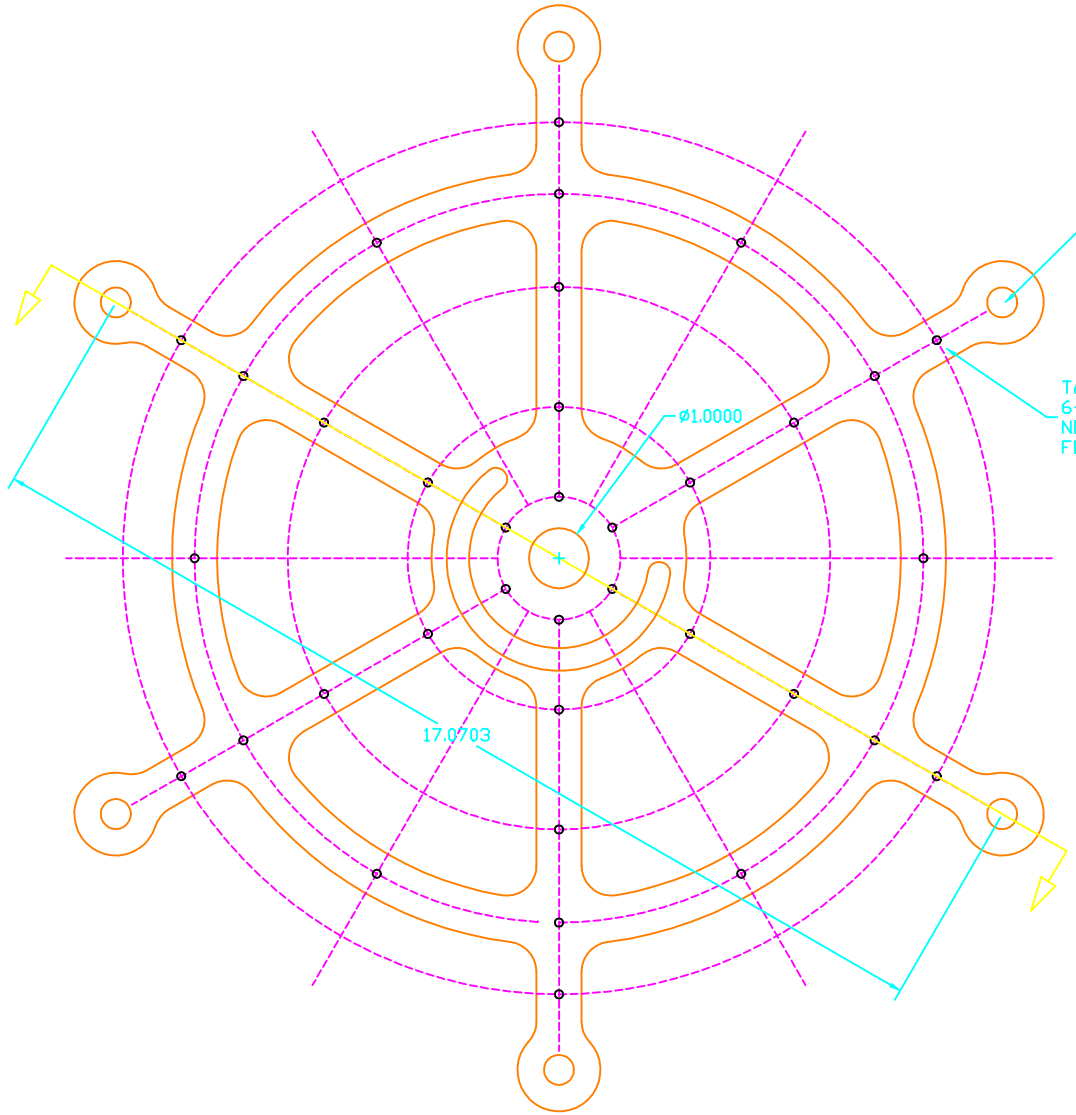

NOTE: SOME DIMENSIONS OMITTED
DUE TO COMPLEXITY OF DRAWING.
OVERALL DIMENSIONS GIVEN
AS REFERENCE.
DRAWING IS TO SCALE.

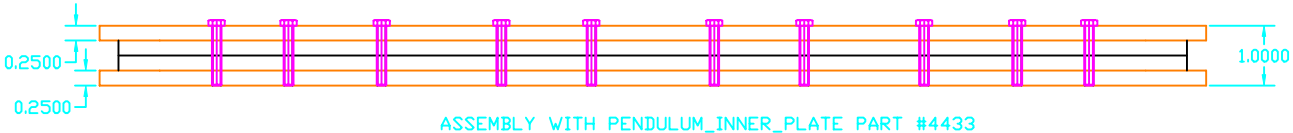

ASSEMBLY WITH PENDULUM_INNER_PLATE PART #4433

NAME: PENDULUM_OUTER_PLATE.DWG		
SCALE: FULL	DATE: 9-3-99	PART #: 4432.2
SHEET SIZE: D	REV.: 2	
DRAWN BY: EAW		
TOLERANCE: ±0.005	UNLESS OTHERWISE SPECIFIED	
TOLERANCE HELD AFTER PLATING	ALL DIMENSIONS ARE IN INCHES	
MATL.: MONEL	QTY.: 2	
FINISH:	SHEET 1 OF 1	

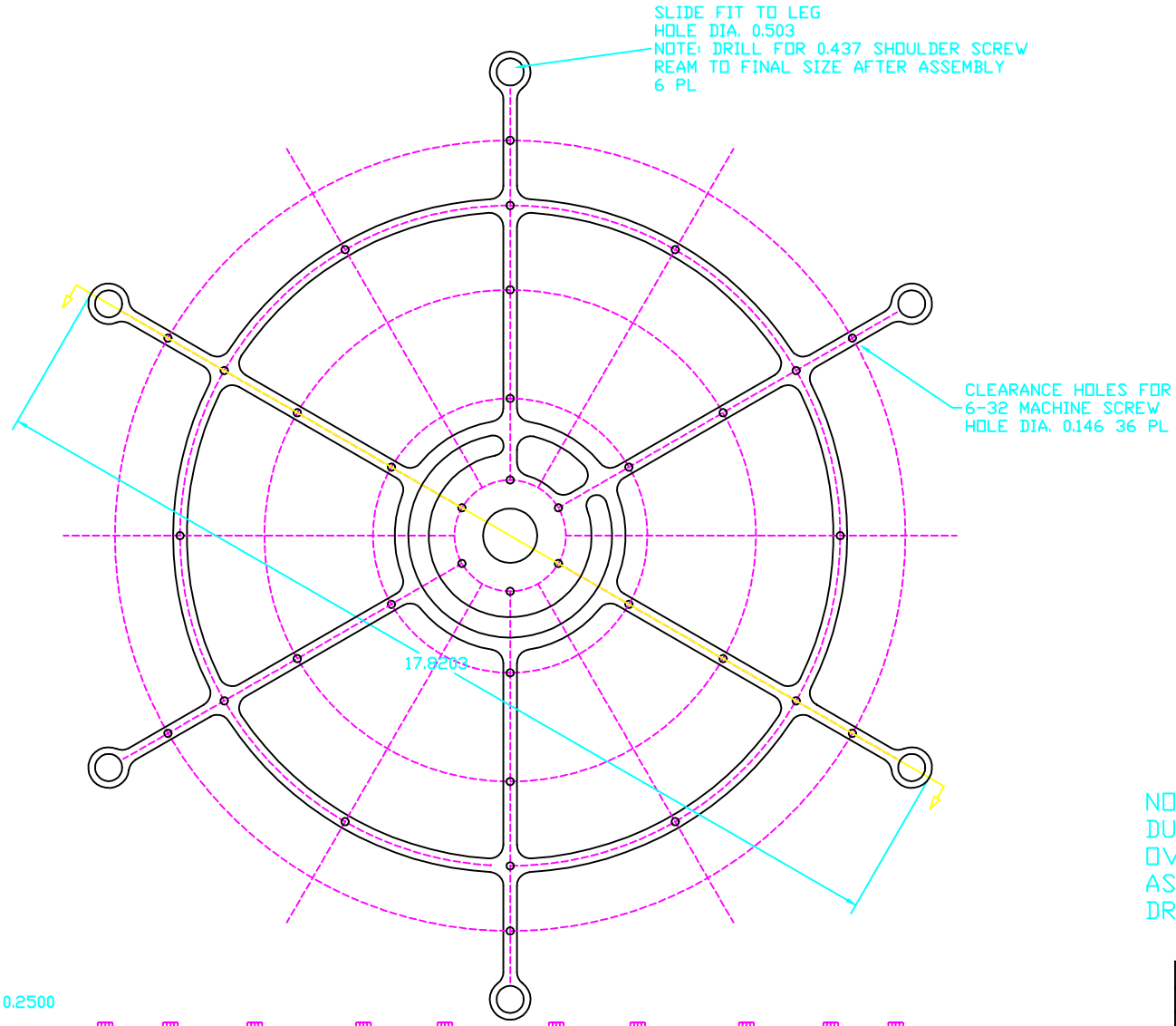

NOTE: SOME DIMENSIONS OMITTED
DUE TO COMPLEXITY OF DRAWING.
OVERALL DIMENSIONS GIVEN
AS REFERENCE.
DRAWING IS TO SCALE.

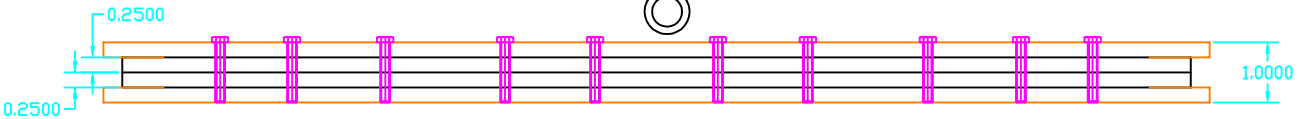

ASSEMBLY WITH PENDULUM_OUTER_PLATE PART #4432

NAME: PENDULUM_INNER_PLATE.DWG		
SCALE: FULL	DATE: 9-3-99	PART #: 4433.2
SHEET SIZE: D	REV.: 2	
DRAWN BY: EAW		
TOLERANCE: ±0.005	UNLESS OTHERWISE SPECIFIED	
TOLERANCE HELD AFTER PLATING	ALL DIMENSIONS ARE IN INCHES	
MATL.: MONEL	QTY.: 2	
FINISH:	SHEET 1 OF 1	

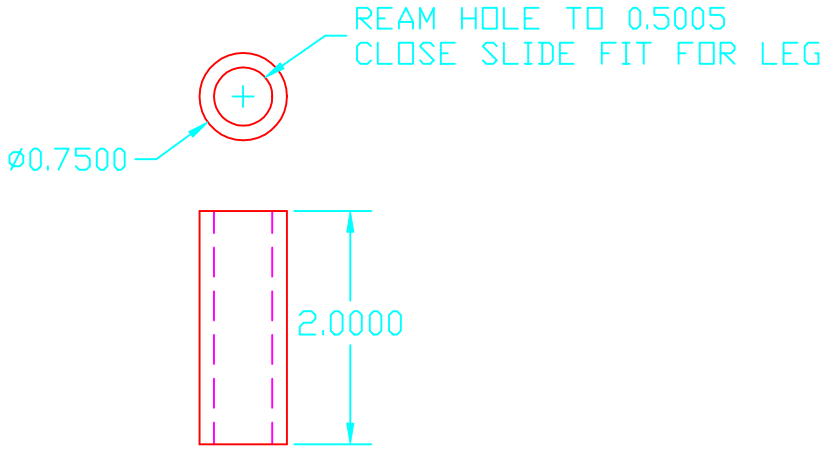

NAME: PEND_LEG_SPACER.DWG		
SCALE: FULL	DATE: 8-27-99	PART #: 4434.1
SHEET SIZE: B	REV.: 1	
DRAWN BY: EAW/JWS		
TOLERANCE: ±0.003	UNLESS OTHERWISE SPECIFIED	
TOLERANCE HELD AFTER PLATING	ALL DIMENSIONS ARE IN INCHES	
MATL.: STAINLESS STEEL	QTY.: 4	
FINISH:	SHEET 1 OF 1	

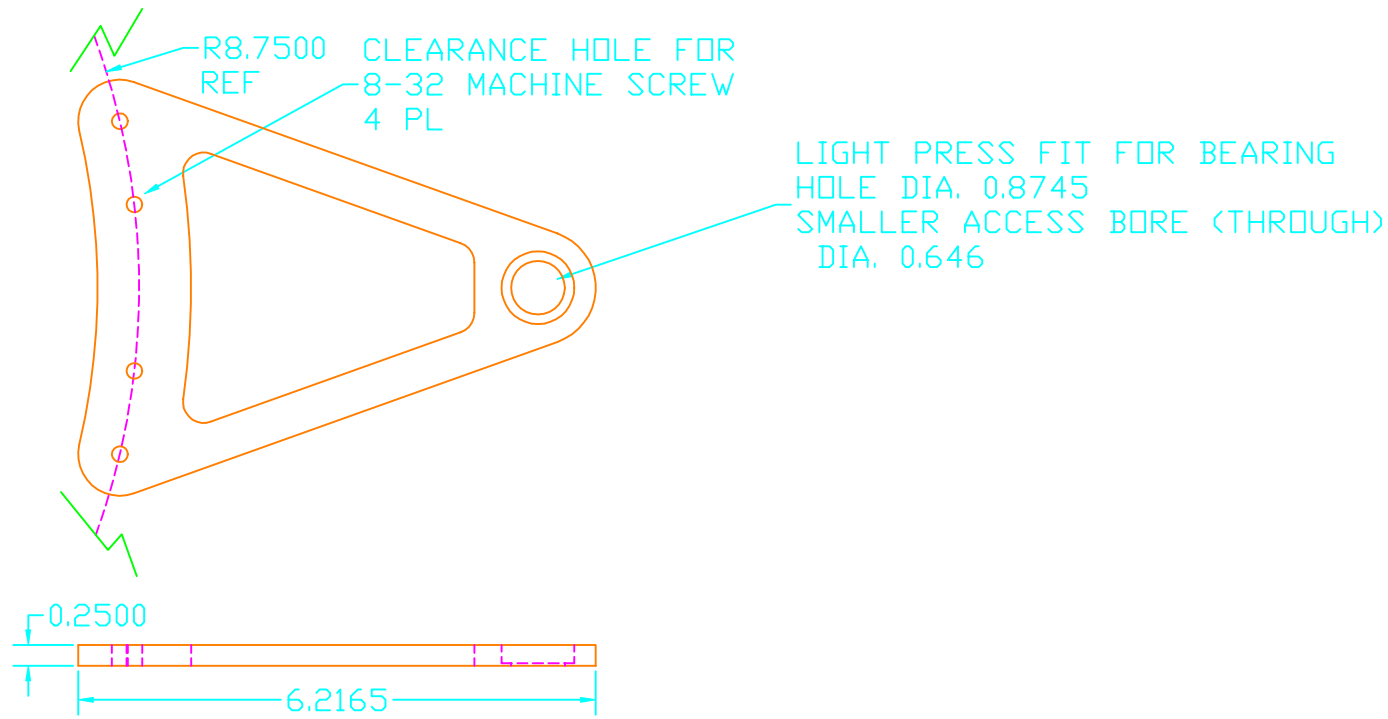

NAME: SUB_BASE_BEARING_PLATE.DWG		
SCALE: FULL	DATE: 10-15-99	PART #: 4458.1
SHEET SIZE: C	REV.: 1	
DRAWN BY: EAW		
TOLERANCE: ±0.005	UNLESS OTHERWISE SPECIFIED	
TOLERANCE HELD AFTER PLATING	ALL DIMENSIONS ARE IN INCHES	
MATL.: MONEL	QTY.: 1	
FINISH:	SHEET 1 OF 1	

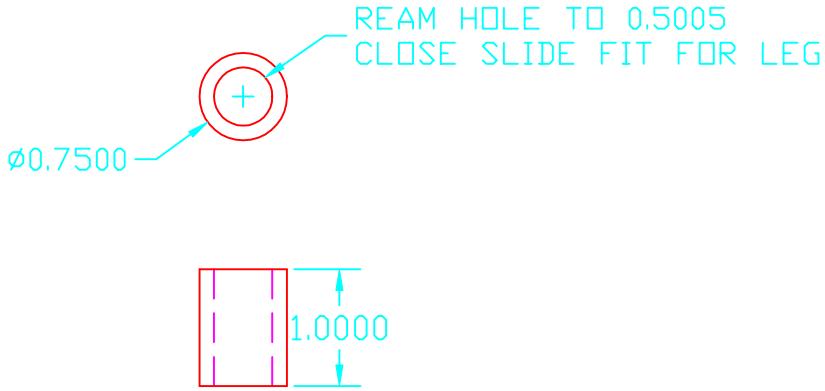

NAME: WING_LEG_SPACER.DWG		
SCALE: FULL	DATE: 8-27-99	PART #: 4418.1
SHEET SIZE: B	REV.: 1	
DRAWN BY: EAW/JWS		
TOLERANCE: ±0.003	UNLESS OTHERWISE SPECIFIED	
TOLERANCE HELD AFTER PLATING	ALL DIMENSIONS ARE IN INCHES	
MATL.: STAINLESS STEEL	QTY.: 4	
FINISH:	SHEET 1 OF 1	

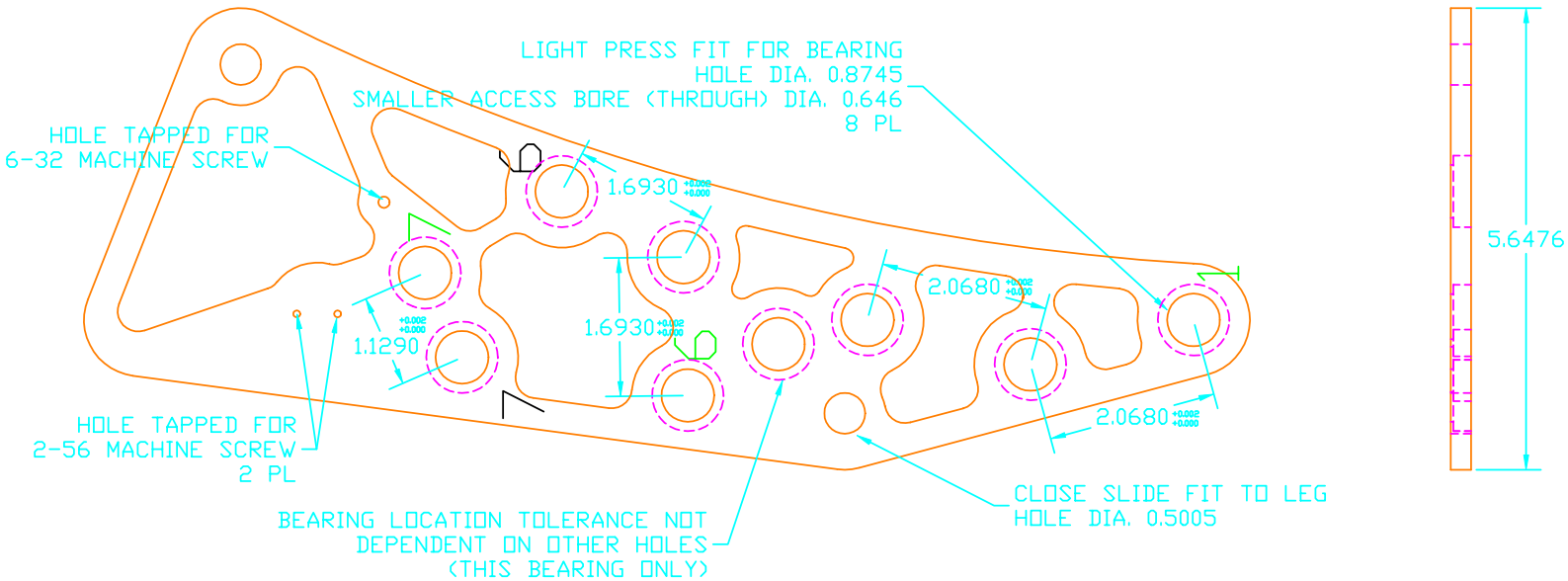

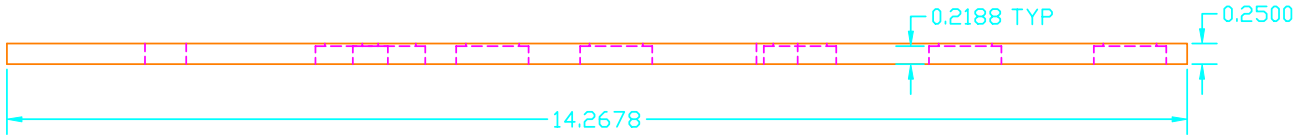

NAME: WING_LEFT.DWG		
SCALE: FULL	DATE: 12-6-99	PART #: 4421.4
SHEET SIZE: C	REV.: 4	
DRAWN BY: EAW		
TOLERANCE: ±0.005	UNLESS OTHERWISE SPECIFIED	
TOLERANCE HELD AFTER PLATING	ALL DIMENSIONS ARE IN INCHES	
MATL.: MONEL	QTY.: 1	
FINISH:	SHEET 1 OF 1	

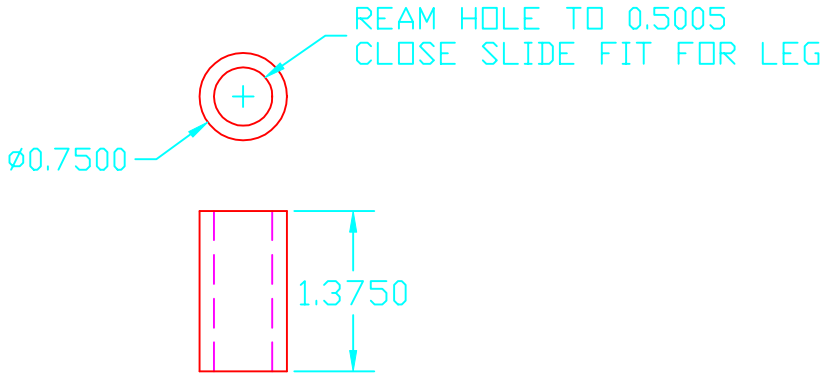

NAME: WARNING_LEG_SPACER.DWG		
SCALE: FULL	DATE: 10-12-99	PART #: 4053.1
SHEET SIZE: B	REV.: 1	
DRAWN BY: EAW		
TOLERANCE: ±0.003	UNLESS OTHERWISE SPECIFIED	
TOLERANCE HELD AFTER PLATING	ALL DIMENSIONS ARE IN INCHES	
MATL.: STAINLESS STEEL	QTY.: 6	
FINISH:	SHEET 1 OF 1	

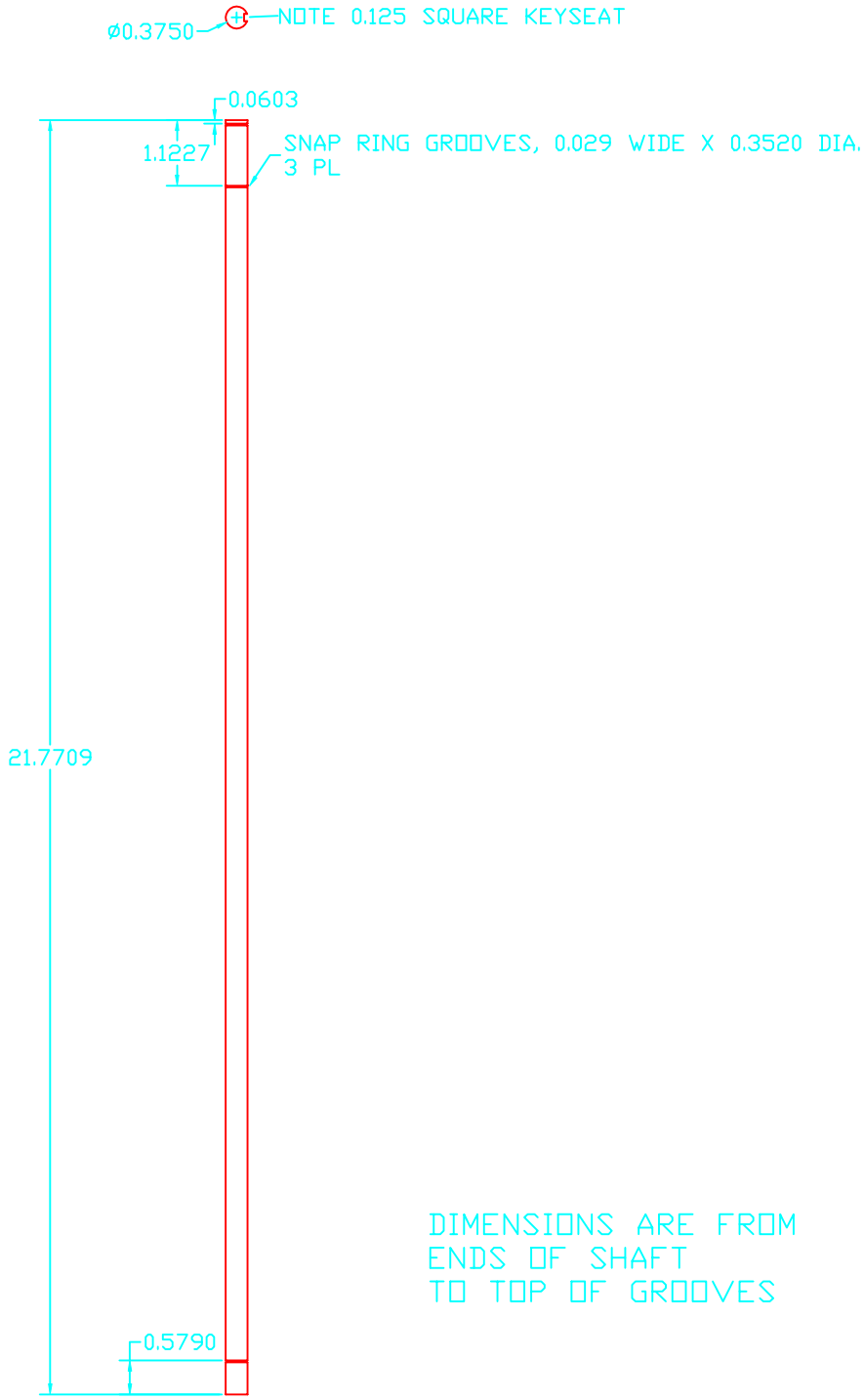

DIMENSIONS ARE FROM
ENDS OF SHAFT
TO TOP OF GROOVES

NAME: VERTICAL SHAFT 7.DWG			
SCALE: FULL	DATE: 9-28-99	PART #: 4431.1	
SHEET SIZE: D	REV.: 1		
DRAWN BY: EAW			
TOLERANCE: ±0.001	UNLESS OTHERWISE SPECIFIED		
TOLERANCE HELD AFTER PLATING	ALL DIMENSIONS ARE IN INCHES		
MATL.: STAINLESS STEEL BAR COLD FINISHED OR GROUND	QTY.: 1		
FINISH:	SHEET 1 OF 1		

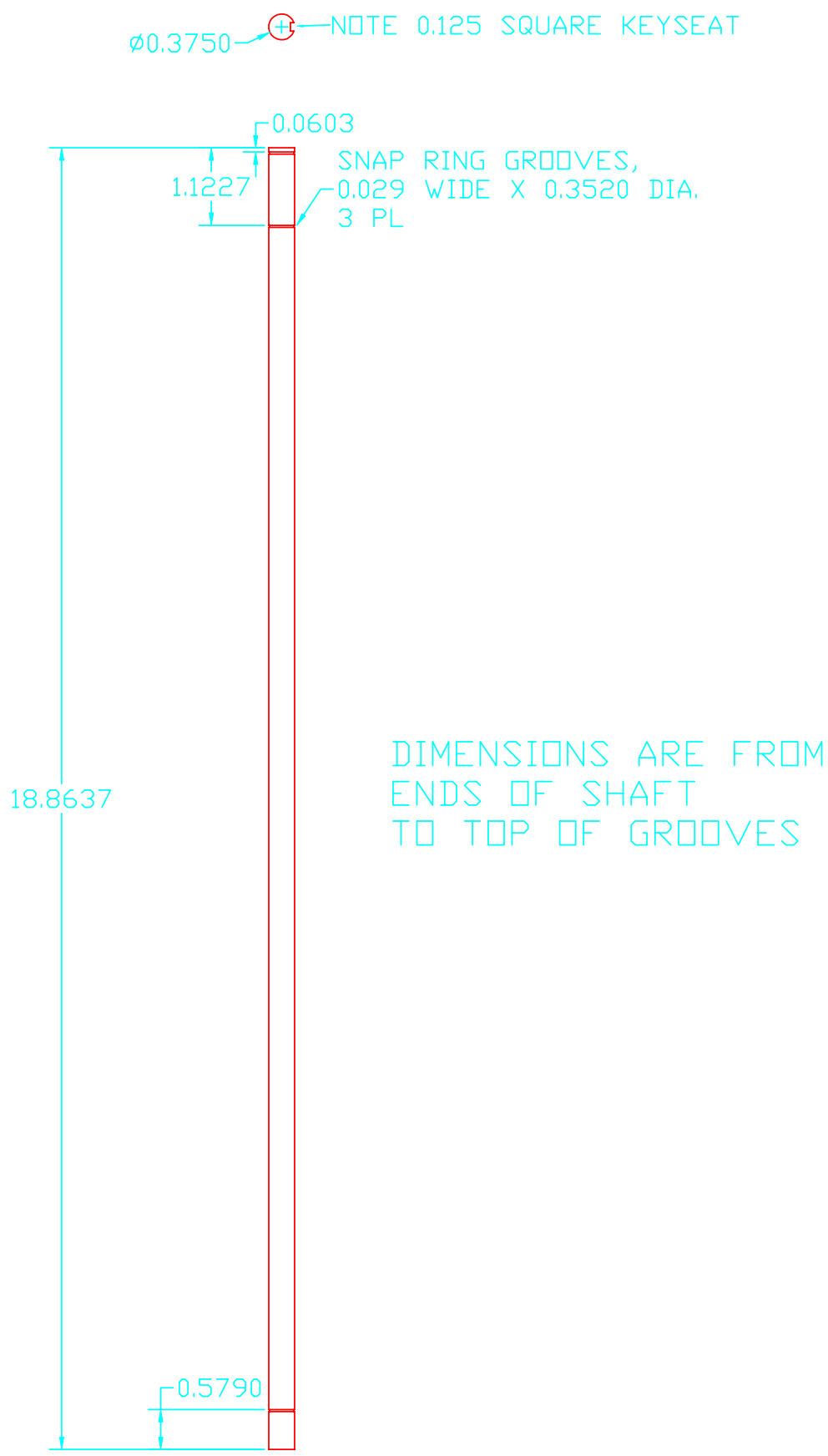

DIMENSIONS ARE FROM
ENDS OF SHAFT
TO TOP OF GROOVES

NAME: VERTICAL SHAFT 6.DWG	
SCALE: FULL	DATE: 9-28-99
SHEET SIZE: C	REV: 1
DRAWN BY: EAW	
TOLERANCE: ±0.001	UNLESS OTHERWISE SPECIFIED
TOLERANCE HELD AFTER PLATING	ALL DIMENSIONS ARE IN INCHES
MATL.: STAINLESS STEEL BAR COLD FINISHED OR GROUND	QTY.: 1
FINISH:	SHEET 1 OF 1

PART #: 4429.1

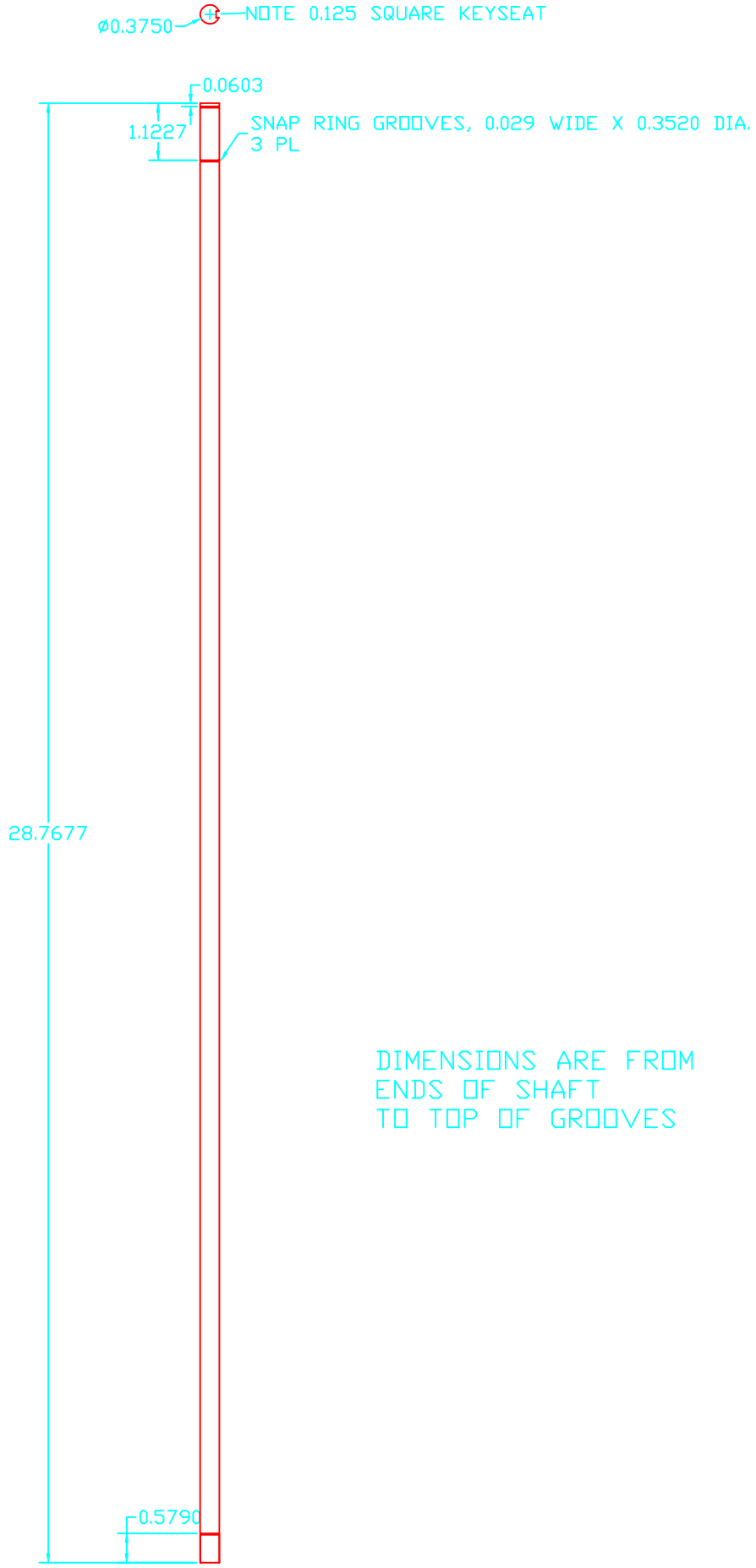

DIMENSIONS ARE FROM
ENDS OF SHAFT
TO TOP OF GROOVES

NAME: VERTICAL SHAFT 5.DWG			
SCALE: FULL	DATE: 9-28-99	PART #: 44281	
SHEET SIZE: D	REV.: 1		
DRAWN BY: EAW			
TOLERANCE: ±0.001		UNLESS OTHERWISE SPECIFIED	
TOLERANCE HELD AFTER PLATING		ALL DIMENSIONS ARE IN INCHES	
MATL.: STAINLESS STEEL BAR	QTY.: 1		
FINISH: COLD FINISHED OR GROUND		SHEET 1 OF 1	

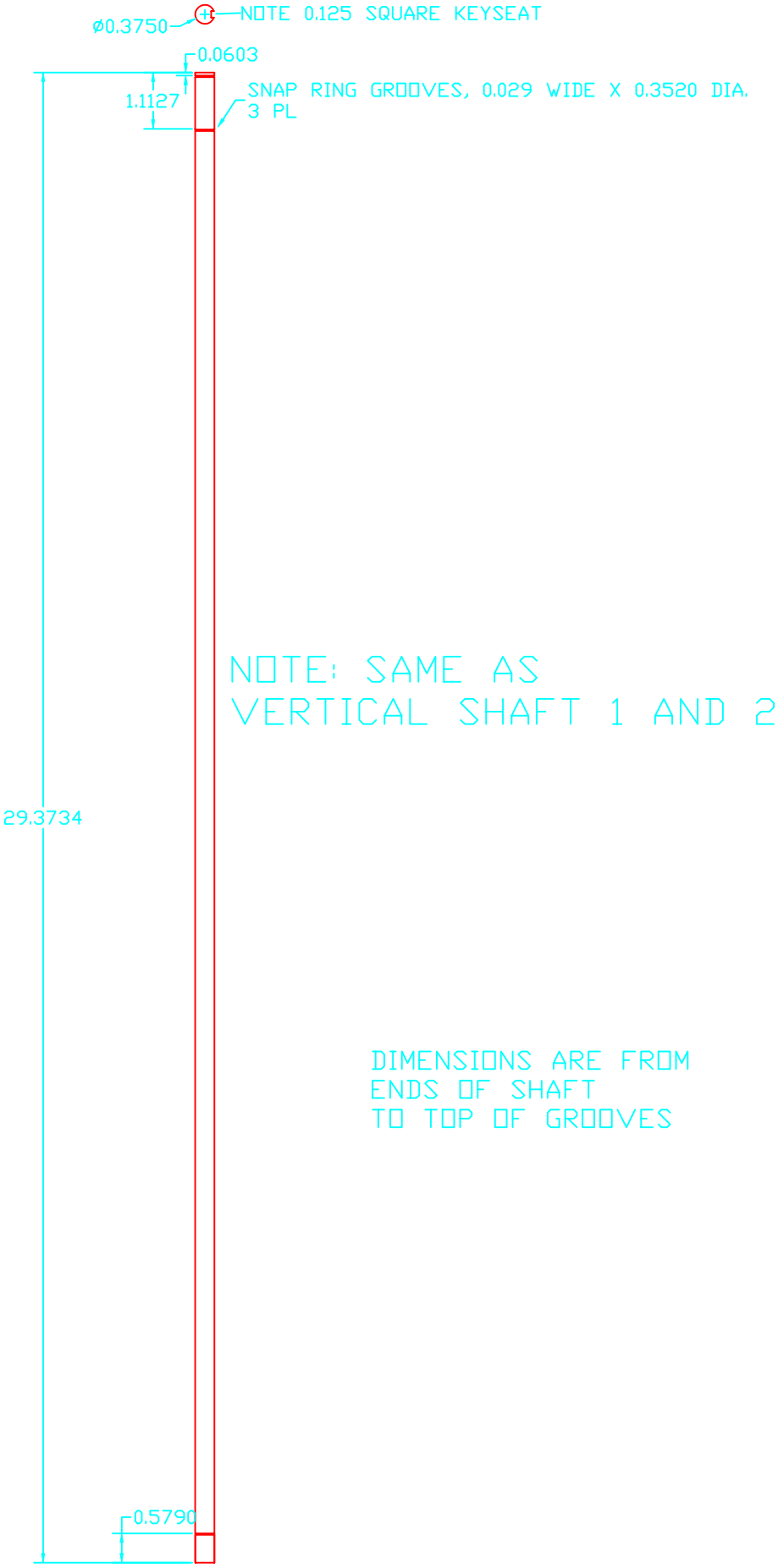

NOTE: SAME AS
VERTICAL SHAFT 1 AND 2

DIMENSIONS ARE FROM
ENDS OF SHAFT
TO TOP OF GROOVES

NAME: VERTICAL SHAFT 4.DWG			
SCALE: FULL	DATE: 9-28-99	PART #: 4427.1	
SHEET SIZE: D	REV.: 1		
DRAWN BY: EAW			
TOLERANCE: ±0.001	UNLESS OTHERWISE SPECIFIED		
TOLERANCE HELD AFTER PLATING	ALL DIMENSIONS ARE IN INCHES		
MATL.: STAINLESS STEEL BAR COLD FINISHED OR GROUND	QTY.: 1		
FINISH:	SHEET 1 OF 1		

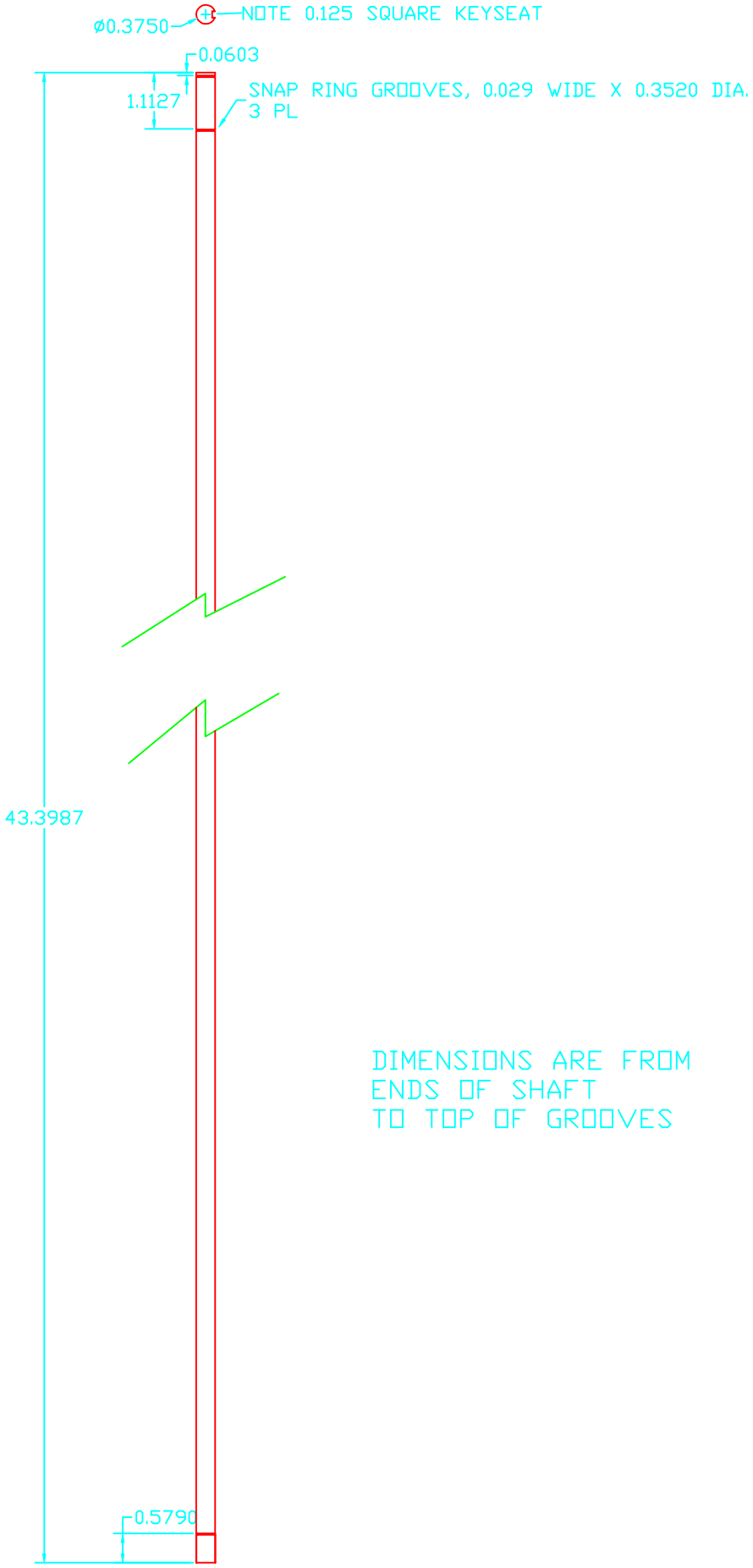

DIMENSIONS ARE FROM
ENDS OF SHAFT
TO TOP OF GROOVES

NAME: VERTICAL SHAFT 3.DWG			
SCALE: FULL	DATE: 9-28-99	PART #: 4426.1	
SHEET SIZE: D	REV.: 1		
DRAWN BY: EAW			
TOLERANCE: ±0.001	UNLESS OTHERWISE SPECIFIED		
TOLERANCE HELD AFTER PLATING	ALL DIMENSIONS ARE IN INCHES		
MATL.: STAINLESS STEEL BAR COLD FINISHED OR GROUND	QTY.: 1		
FINISH:	SHEET 1 OF 1		

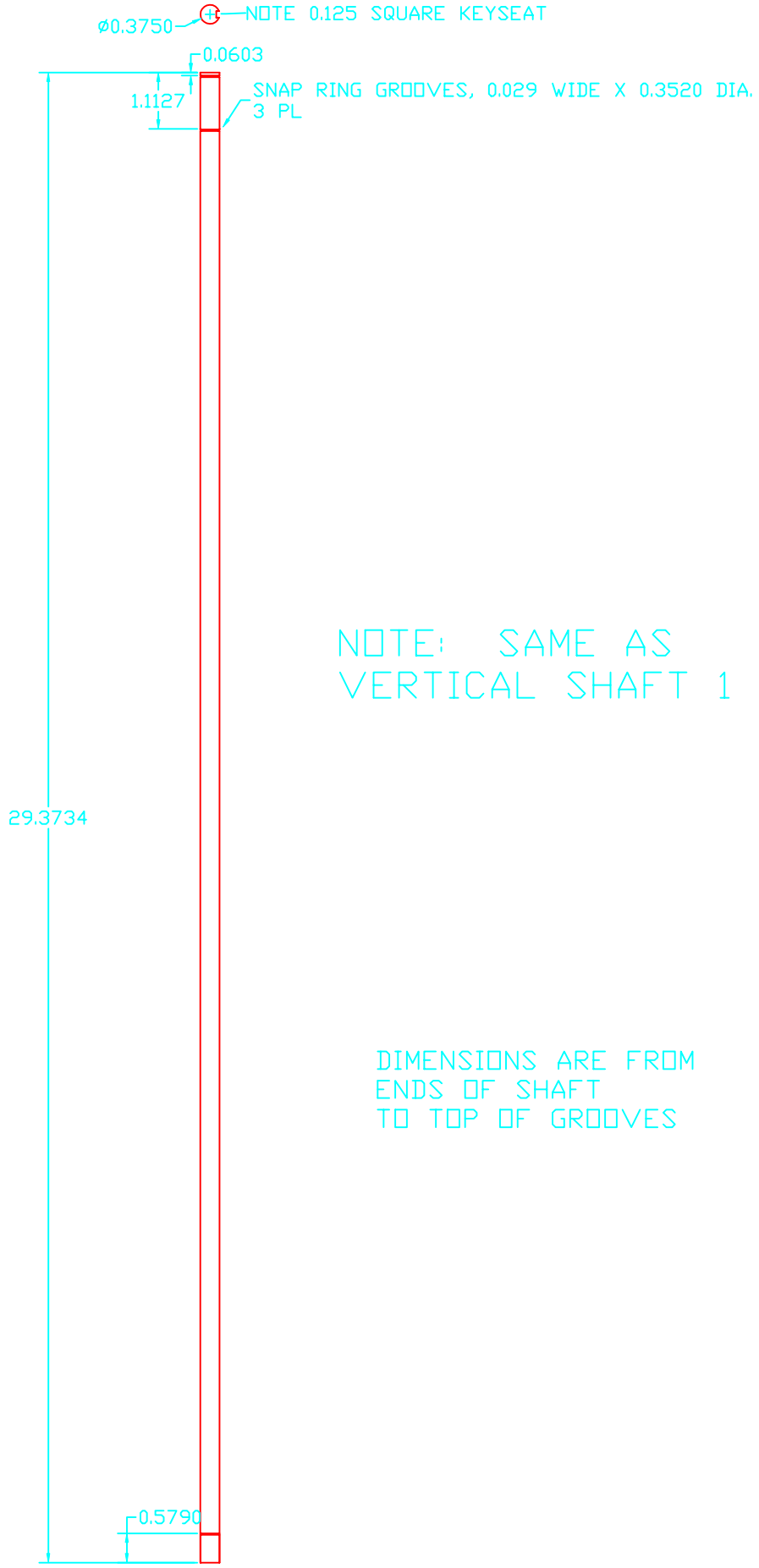

NOTE: SAME AS
VERTICAL SHAFT 1

DIMENSIONS ARE FROM
ENDS OF SHAFT
TO TOP OF GROOVES

NAME: VERTICAL SHAFT 2.DWG	
SCALE: FULL	DATE: 9-28-99
PART #: 4425.1	
SHEET SIZE: D	REV.: 1
DRAWN BY: EAW	
TOLERANCE: ±0.001	
UNLESS OTHERWISE SPECIFIED	
TOLERANCE HELD AFTER PLATING	
ALL DIMENSIONS ARE IN INCHES	
MATL.: STAINLESS STEEL BAR COLD FINISHED OR GROUND	QTY.: 1
FINISH:	SHEET 1 OF 1

DIMENSIONS ARE FROM
ENDS OF SHAFT
TO TOP OF GROOVES

NAME: VERTICAL SHAFT 1.DWG	
SCALE: FULL	DATE: 9-28-99
PART #: 4424.1	
SHEET SIZE: D	REV.: 1
DRAWN BY: EAW	
TOLERANCE: ±0.001	
UNLESS OTHERVISE SPECIFIED	
TOLERANCE HELD AFTER PLATING	
ALL DIMENSIONS ARE IN INCHES	
MATL.: STAINLESS STEEL BAR COLD FINISHED OR GROUND	QTY.: 1
FINISH:	SHEET 1 OF 1

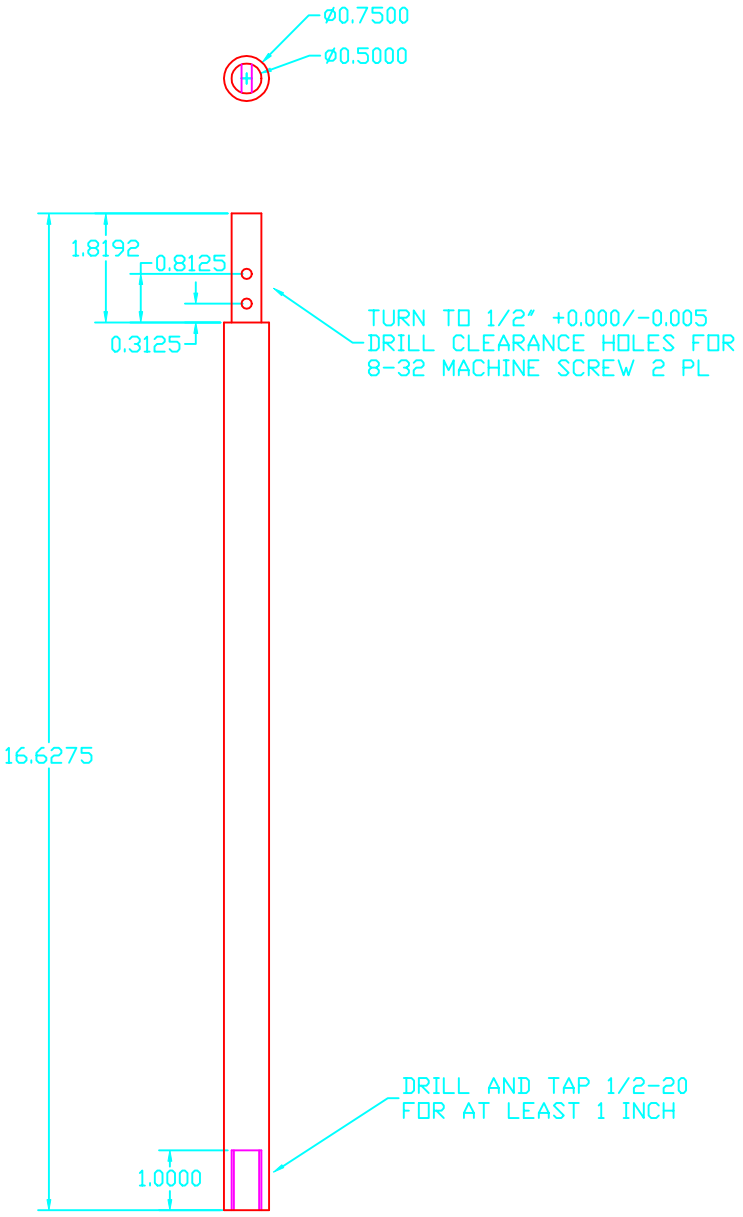

NAME:	UPPER_LEG_2.DWG
SCALE:	FULL
DATE:	9-27-99
PART #:	4439.1
SHEET SIZE:	D
REV.:	1
DRAWN BY:	EAW
TOLERANCE:	±0.001
UNLESS OTHERWISE SPECIFIED	
TOLERANCE HELD AFTER PLATING	
ALL DIMENSIONS ARE IN INCHES	
MATL.:	STAINLESS STEEL BAR COLD FINISHED OR GROUND
QTY.:	4
FINISH:	
SHEET 1 OF 1	

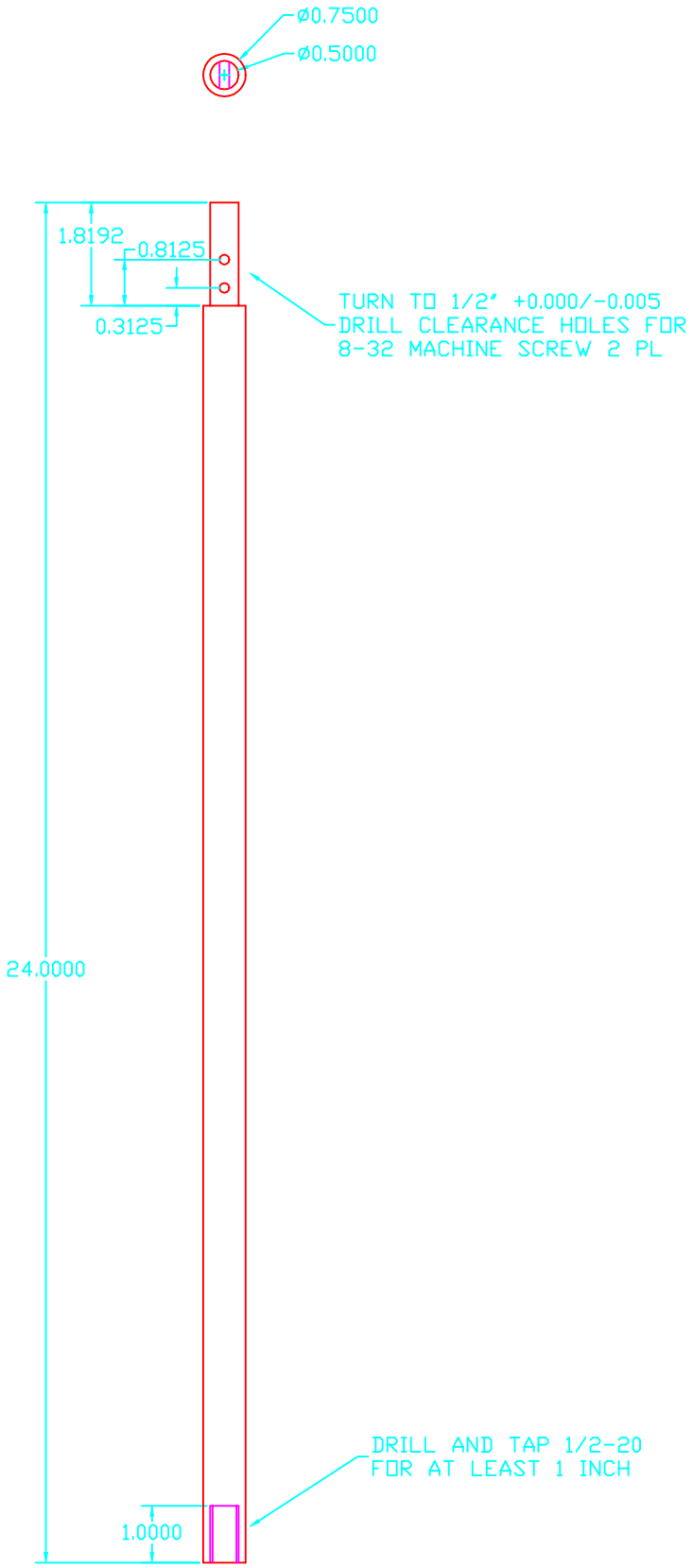

NAME: UPPER_LEG_1.DWG			
SCALE: FULL	DATE: 9-27-99	PART #: 4438.1	
SHEET SIZE: D	REV.: 1		
DRAWN BY: EAW			
TOLERANCE: ±0.001	UNLESS OTHERWISE SPECIFIED		
TOLERANCE HELD AFTER PLATING	ALL DIMENSIONS ARE IN INCHES		
MATL.: STAINLESS STEEL BAR COLD FINISHED OR GROUND	QTY.: 2		
FINISH:	SHEET 1 OF 1		

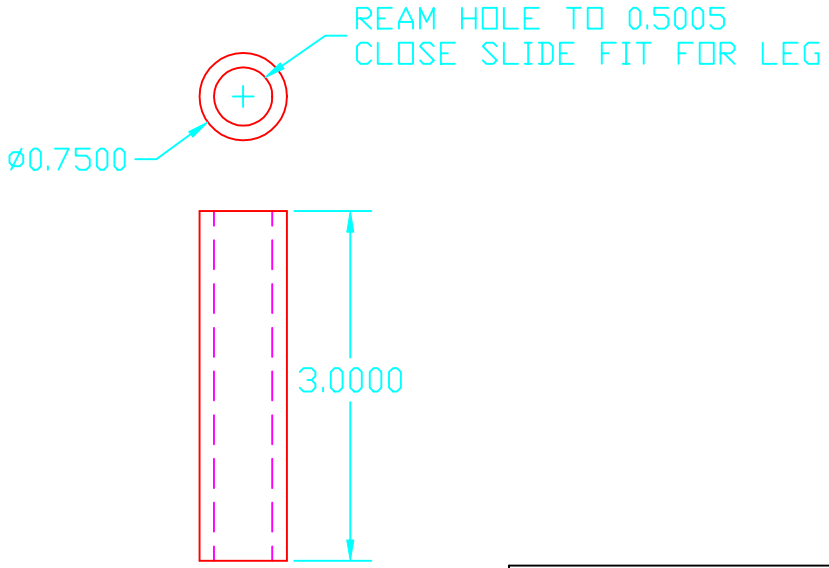

NAME: UPPER_CAM_LEG_SPACER.DWG		
SCALE: FULL	DATE: 8-27-99	PART #: 4423.1
SHEET SIZE: B	REV.: 1	
DRAWN BY: EAW/JWS		
TOLERANCE: ±0.003	UNLESS OTHERWISE SPECIFIED	
TOLERANCE HELD AFTER PLATING	ALL DIMENSIONS ARE IN INCHES	
MATL.: STAINLESS STEEL	QTY.: 6	
FINISH:	SHEET 1 OF 1	

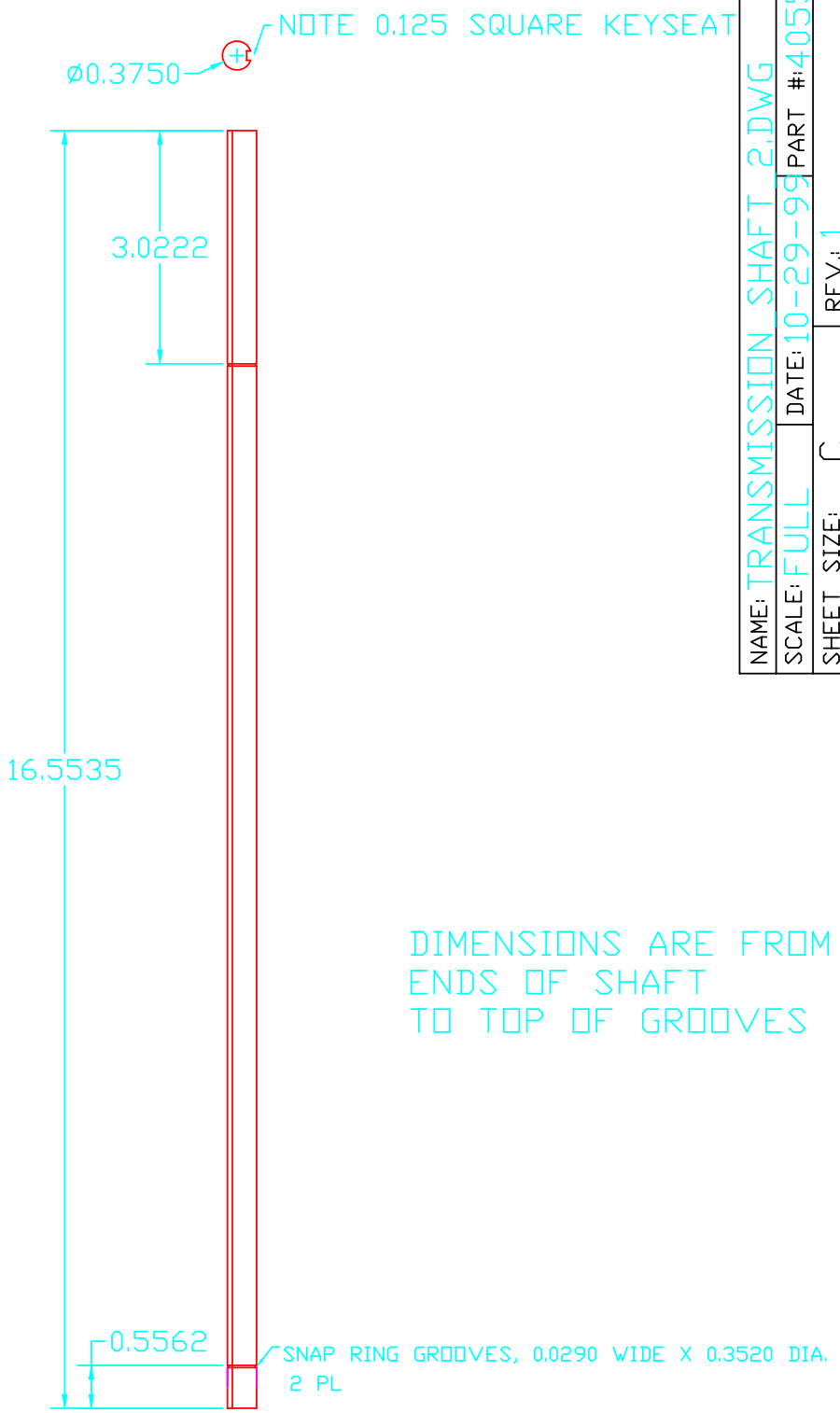

DIMENSIONS ARE FROM
ENDS OF SHAFT
TO TOP OF GROOVES

NAME: TRANSMISSION SHAFT 2.DWG			
SCALE: FULL	DATE: 10-29-99	PART #: 4055.1	
SHEET SIZE: C	REV: 1		
DRAWN BY: EAW/JWS			
TOLERANCE: ±0.001		UNLESS OTHERWISE SPECIFIED	
TOLERANCE HELD AFTER PLATING		ALL DIMENSIONS ARE IN INCHES	
MATL.: STAINLESS STEEL BAR COLD FINISHED OR GROUND		QTY.: 1	
FINISH:			SHEET 1 OF 1

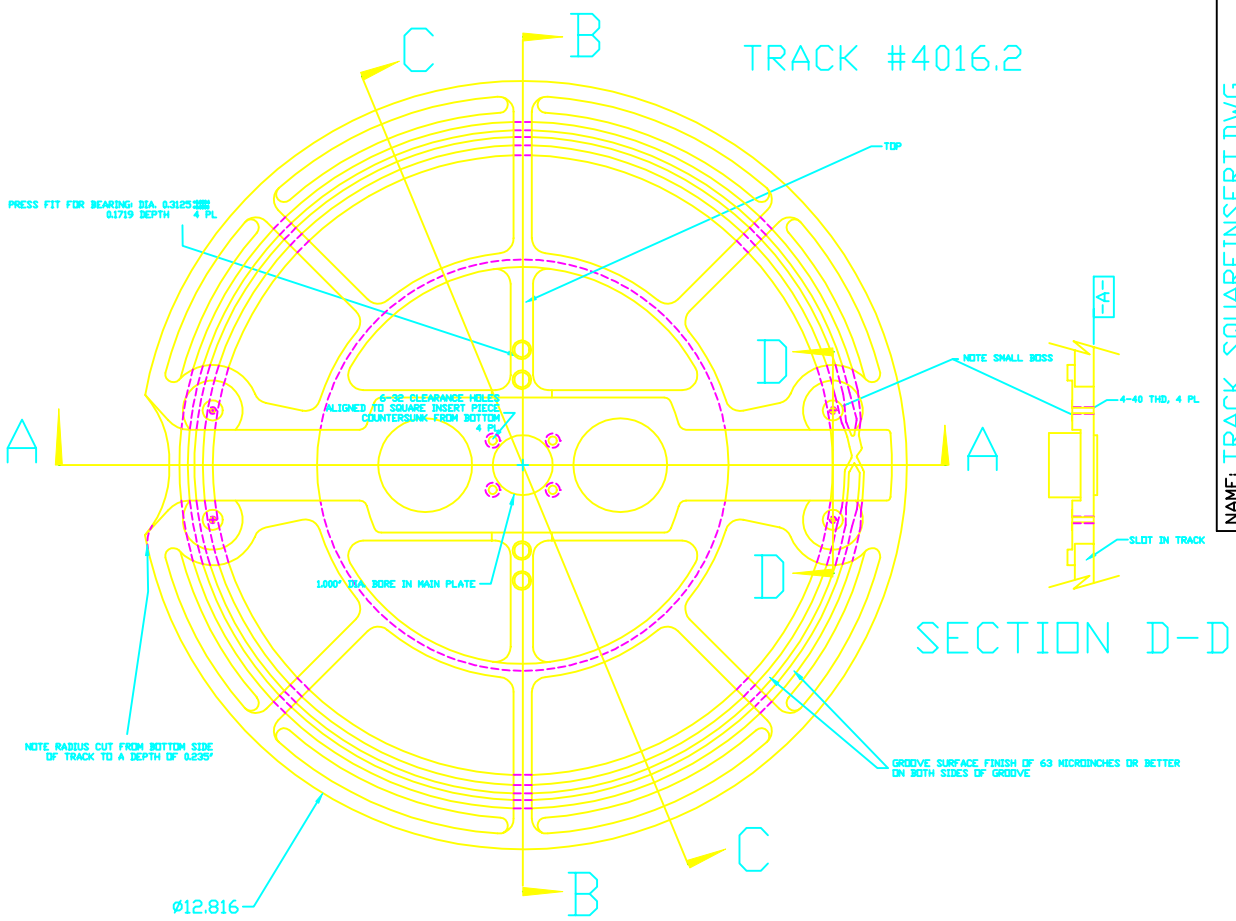

NAME:	TRACK_SQUAREINSERT.DWG
SCALE: FULL	DATE: 8-6-98
PART #: 4016.2,4017.2	
SHEET SIZE: D	REV.: 2
DRAWN BY: EAW/JWS	
TOLERANCE: ±0.005	
UNLESS OTHERWISE SPECIFIED	
TOLERANCE HELD AFTER PLATING	
ALL DIMENSIONS ARE IN INCHES	
MATL.: 360 BRASS	QTY.: 5
FINISH: POLISH TOP SURFACE PER DANNY HILLIS	SHEET 1 OF 1

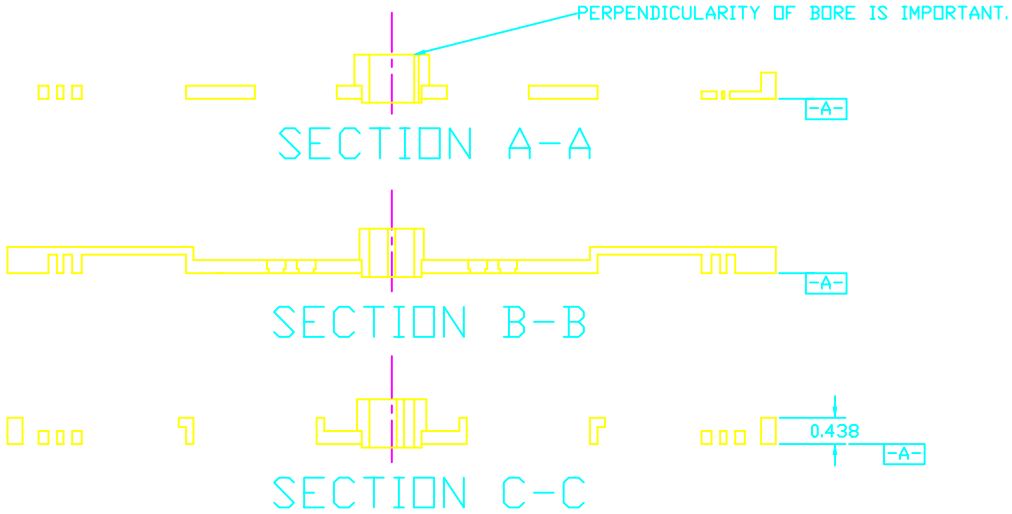

TRACK INSERT #4017.2

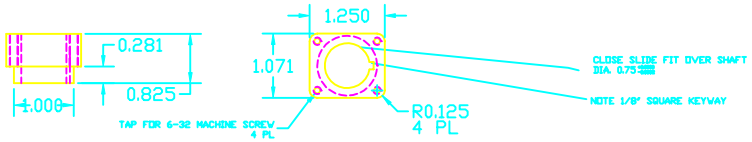

NOTES:

DIMENSIONS OMITTED DUE TO COMPLEXITY OF DRAWING -- OUTER AND INNER DIMENSIONS GIVEN AS REFERENCE. DRAWING IS TO SCALE.

CENTER SECTION IS IN TWO PIECES.
SIDE ELEVATIONS SHOW ASSEMBLY.

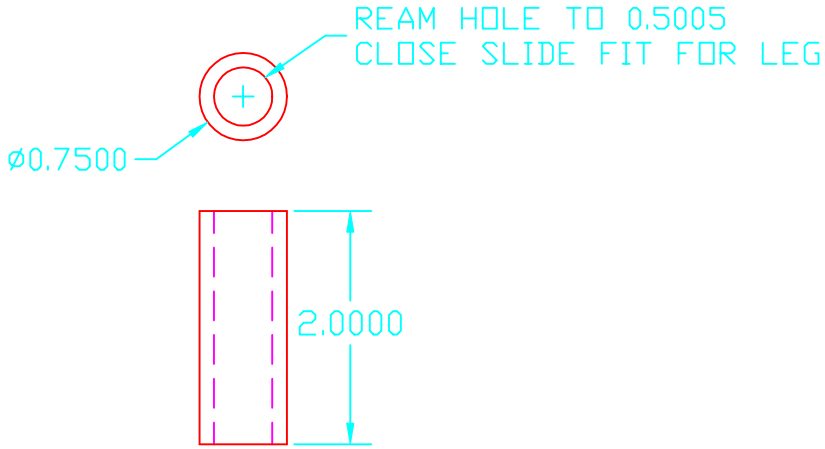

NAME: TRACK_LEG_SPACER.DWG		
SCALE: FULL	DATE: 8-27-99	PART #: 4028.1
SHEET SIZE: B	REV.: 1	
DRAWN BY: EAW/JWS		
TOLERANCE: ±0.003	UNLESS OTHERWISE SPECIFIED	
TOLERANCE HELD AFTER PLATING	ALL DIMENSIONS ARE IN INCHES	
MATL.: STAINLESS STEEL	QTY.: 24	
FINISH:	SHEET 1 OF 1	

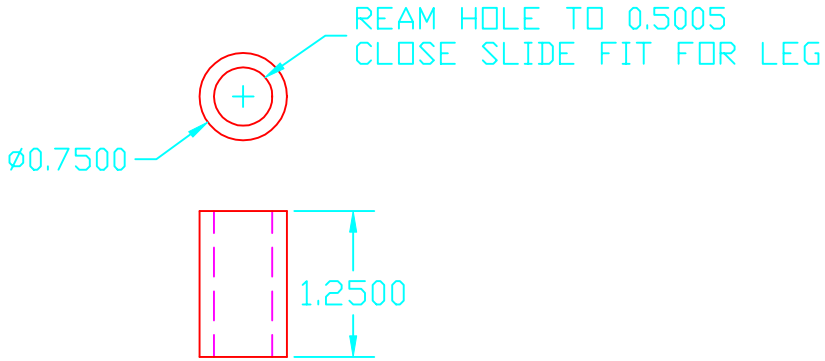

NAME: TOPPLATE_LEG_SPACER.DWG		
SCALE: FULL	DATE: 10-12-99	PART #: 4031.2
SHEET SIZE: B	REV.: 2	
DRAWN BY: EAW/JWS		
TOLERANCE: ±0.003	UNLESS OTHERWISE SPECIFIED	
TOLERANCE HELD AFTER PLATING	ALL DIMENSIONS ARE IN INCHES	
MATL.: STAINLESS STEEL	QTY.: 6	
FINISH:	SHEET 1 OF 1	

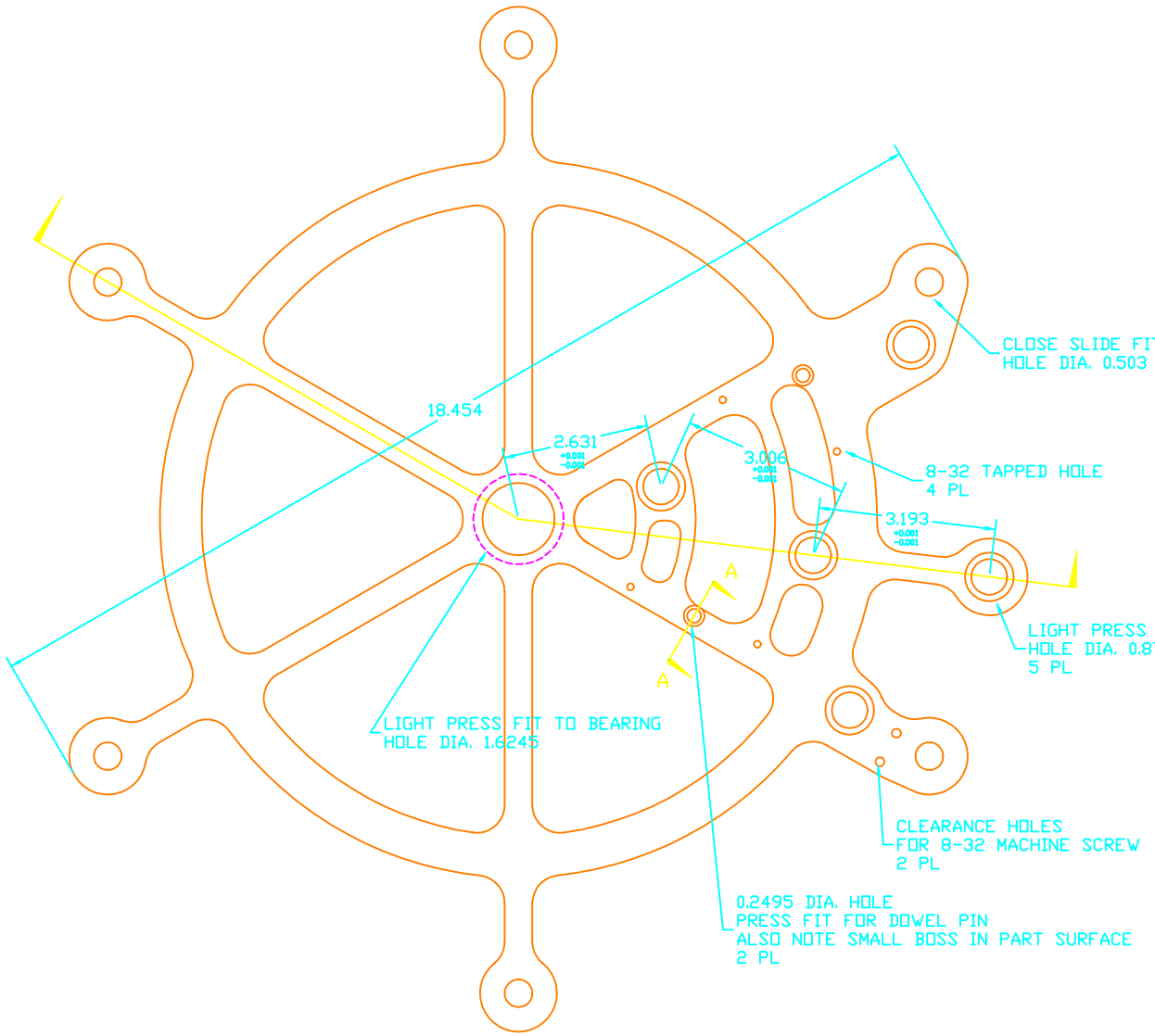

SECTION A-A

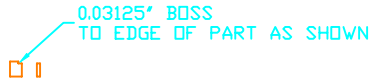

NOTE: SOME DIMENSIONS OMITTED
DUE TO COMPLEXITY OF DRAWING.
OVERALL DIMENSIONS GIVEN
AS REFERENCE.
DRAWING IS TO SCALE.

NAME: TOPPLATE.DWG		
SCALE: FULL	DATE: 12-1-99	PART #: 4032.5
SHEET SIZE: D	REV.: 5	
DRAWN BY: EAW/JWS		
TOLERANCE: ±0.005		UNLESS OTHERWISE SPECIFIED
TOLERANCE HELD AFTER PLATING		ALL DIMENSIONS ARE IN INCHES
MATL.: MONEL	QTY.: 1	
FINISH:		SHEET 1 OF 1

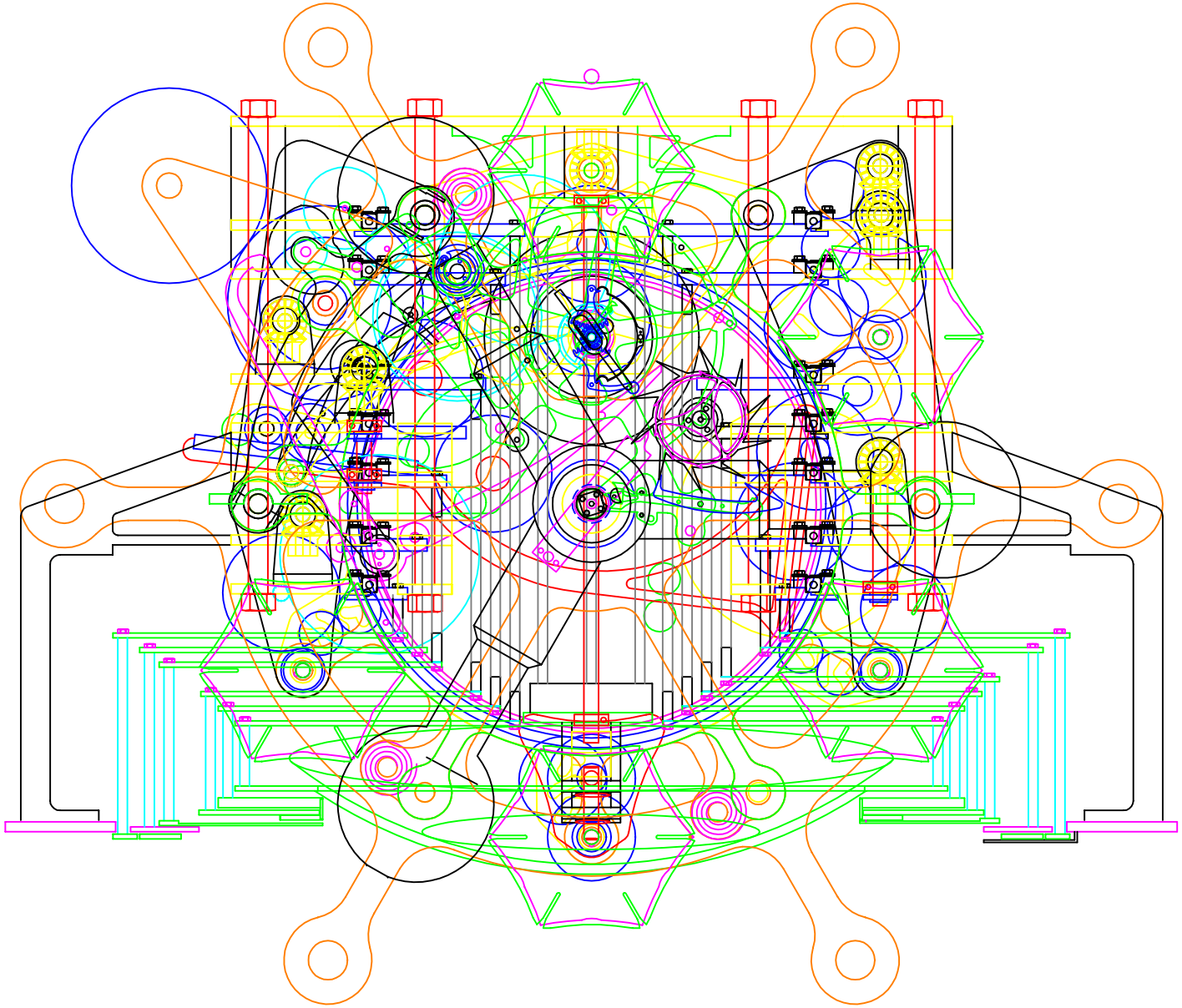

NOTE: SOME DETAIL OMITTED - OVERALL ASSEMBLY ONLY

PART #M24P-1S

TOP - CROSS SECTION
GEAR LAYERS, DIALS
AND HALO

EQUATION OF TIME
BREUGET MECHANISM
IN CENTER, CAM
AND LEVER ON LEFT

ESCAPEMENT

MUNDANE TIME TRAINS
AND SUPPORT PLATES
MINUTE/HOUR IN GREEN
MAIN POWER FROM 90
MIN SHAFT IN YELLOW

WINGS
SHAFTS 1,6,7 ON LEFT
SHAFTS 2,3,4 ON RIGHT

90 MIN TRAIN
AND STOP MECHANISM

HORIZON/ZODIAC
HORIZON OUT ON LEFT
ZODIAC OUTPUT AT TOP

ADDER
CENTER DETAIL OMITTED
GENEVA 1 ON LEFT

CAMS AND MOON IDLER

PENDULUM

BASE AND POWER
TRANSMISSION

NAME:	TOPASSY.DWG
SCALE: FULL	DATE: 1-25-00
SHEET SIZE: E	REV: 1
DRAWN BY: EAW	
TOLERANCE:	
UNLESS OTHERWISE SPECIFIED	
TOLERANCE HELD AFTER PLATING	ALL DIMENSIONS ARE IN INCHES
MATL:	QTY:
FINISH:	SHEET 1 OF 1

PART #: 44401

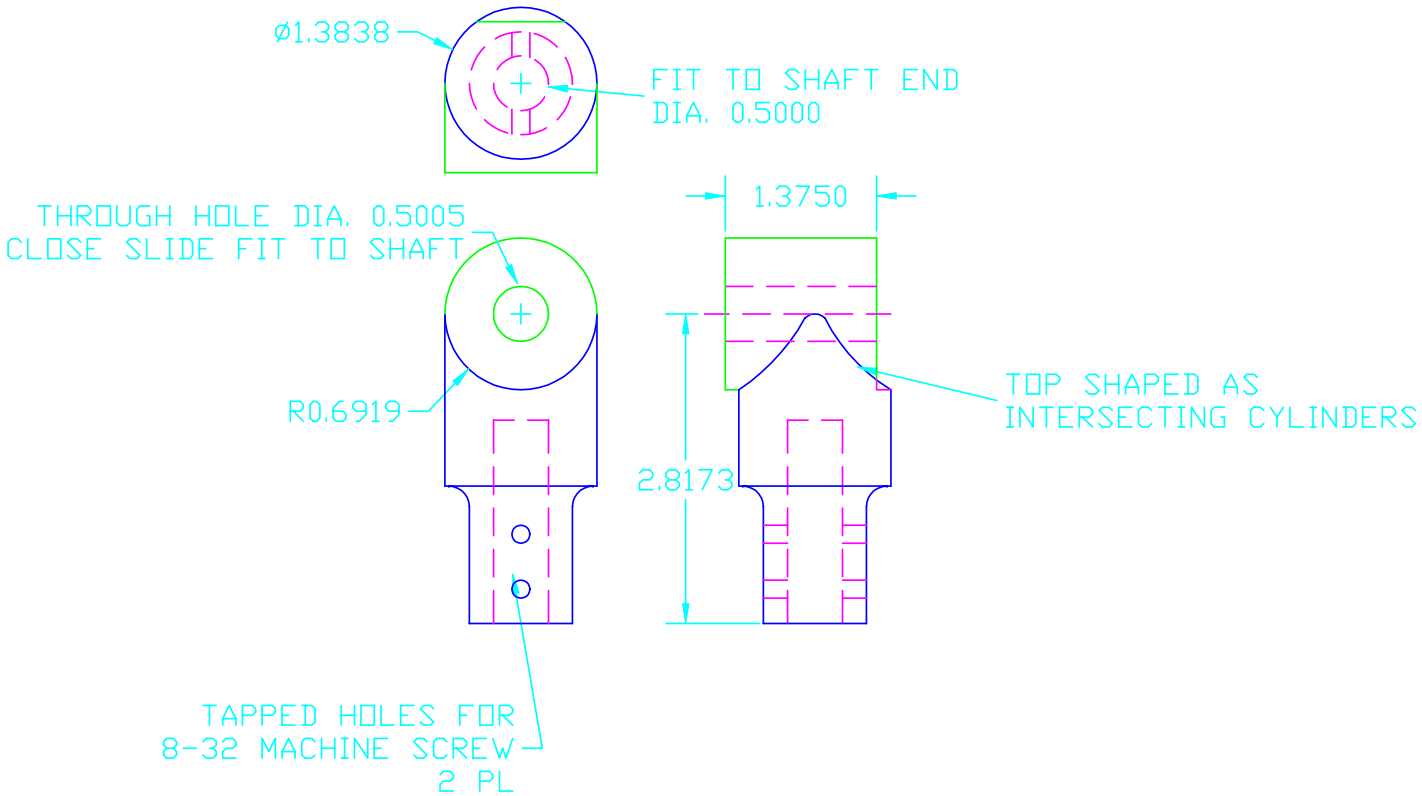

NAME: SUPPORT YOKE_1.DWG		
SCALE: FULL	DATE: 9-27-99	PART #: 4441.3
SHEET SIZE: D	REV.: 3	
DRAWN BY: EAW		
TOLERANCE: ±0.005	UNLESS OTHERWISE SPECIFIED	
TOLERANCE HELD AFTER PLATING	ALL DIMENSIONS ARE IN INCHES	
MATL.: STAINLESS STEEL	QTY.: 2	
FINISH:		SHEET 1 OF 1

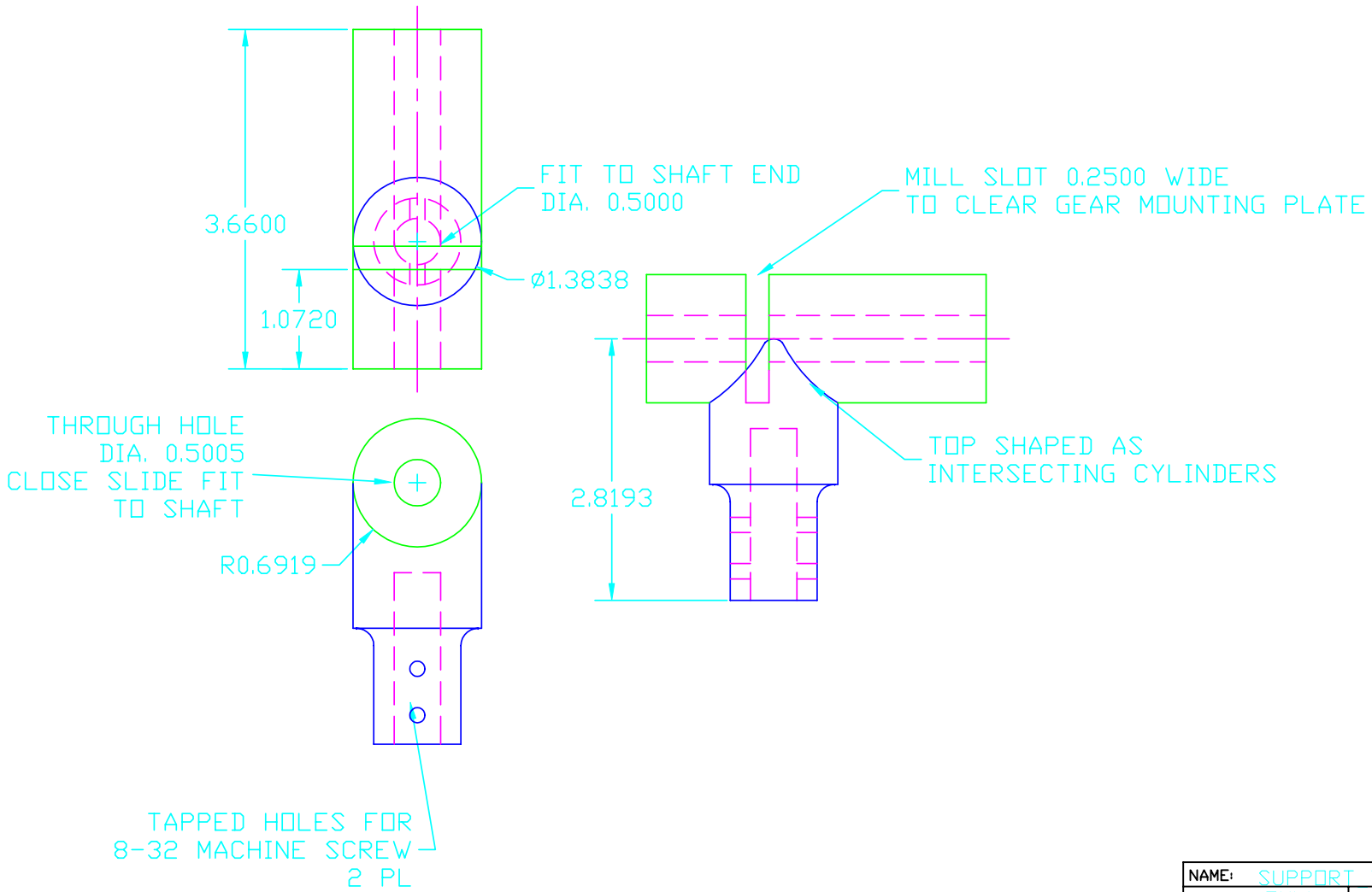

NAME: SUPPORT YOKE 2.DWG		
SCALE: FULL	DATE: 9-27-99	PART #: 444.3
SHEET SIZE: D	REV.: 3	
DRAWN BY: EAW		
TOLERANCE: ±0.005	UNLESS OTHERWISE SPECIFIED	
TOLERANCE HELD AFTER PLATING	ALL DIMENSIONS ARE IN INCHES	
MATL.: STAINLESS STEEL	QTY.: 2	
FINISH:	SHEET 1 OF 1	

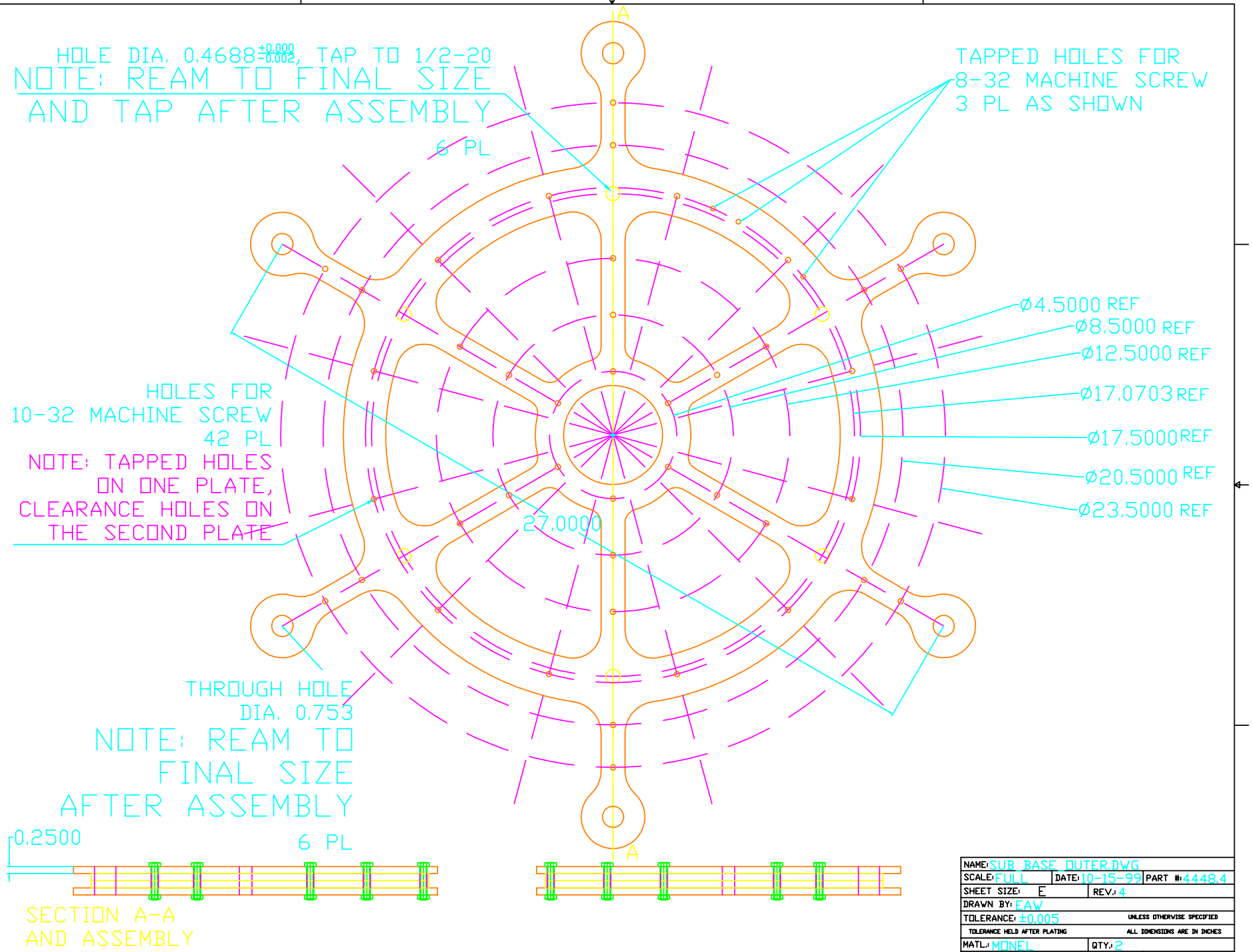

NAME: SUB BASE OUTER.DWG			
SCALE: FULL	DATE: 10-15-99	PART #: 4448.4	
SHEET SIZE: E		REV.: 4	
DRAWN BY: EAW			
TOLERANCE: ±0.005		UNLESS OTHERWISE SPECIFIED	
TOLERANCE HELD AFTER PLATING		ALL DIMENSIONS ARE IN INCHES	
MATL.: MONEL		QTY.: 2	
FINISH: POLISH PER D. HILLIS			SHEET 1 OF 1

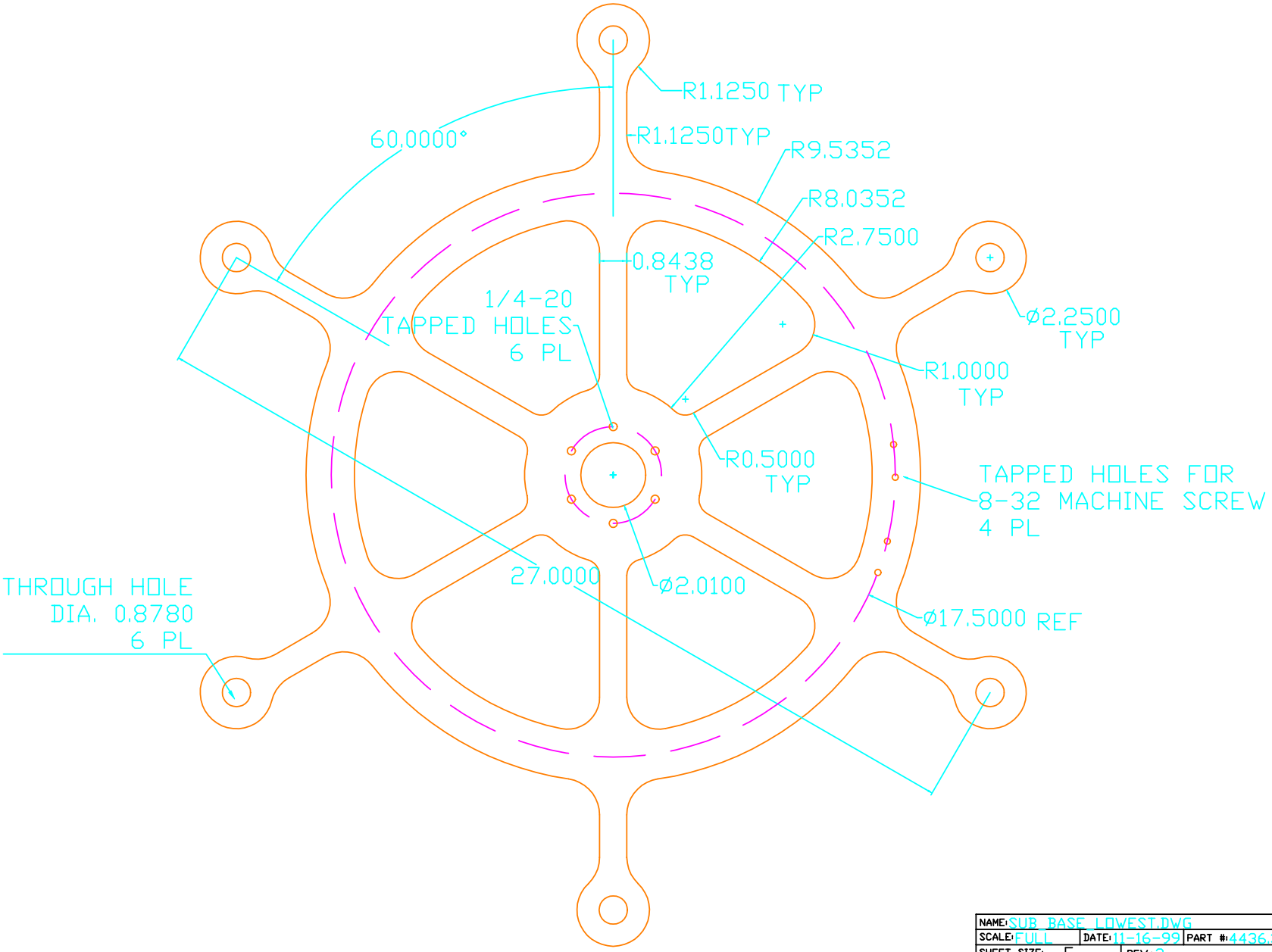

NAME: SUB BASE LOWEST.DWG			
SCALE: FULL	DATE: 11-16-99	PART #: 4436.3	
SHEET SIZE: E		REV.: 3	
DRAWN BY: EAW			
TOLERANCE: ±0.005		UNLESS OTHERWISE SPECIFIED	
TOLERANCE HELD AFTER PLATING		ALL DIMENSIONS ARE IN INCHES	
MATL.: MONEL		QTY.: 1	
FINISH: POLISH PER D. HILLIS			SHEET 1 OF 1

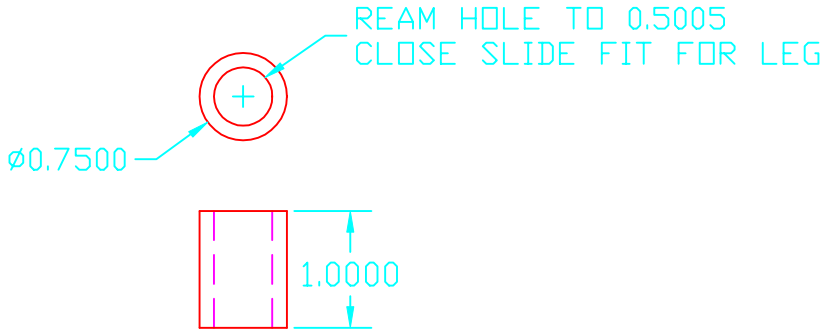

NAME: SUB_BASE_LEG_SPACER.DWG		
SCALE: FULL	DATE: 8-27-99	PART #: 4003.1
SHEET SIZE: B	REV.: 1	
DRAWN BY: EAW/JWS		
TOLERANCE: ±0.003	UNLESS OTHERWISE SPECIFIED	
TOLERANCE HELD AFTER PLATING	ALL DIMENSIONS ARE IN INCHES	
MATL.: STAINLESS STEEL	QTY.: 12	
FINISH:	SHEET 1 OF 1	

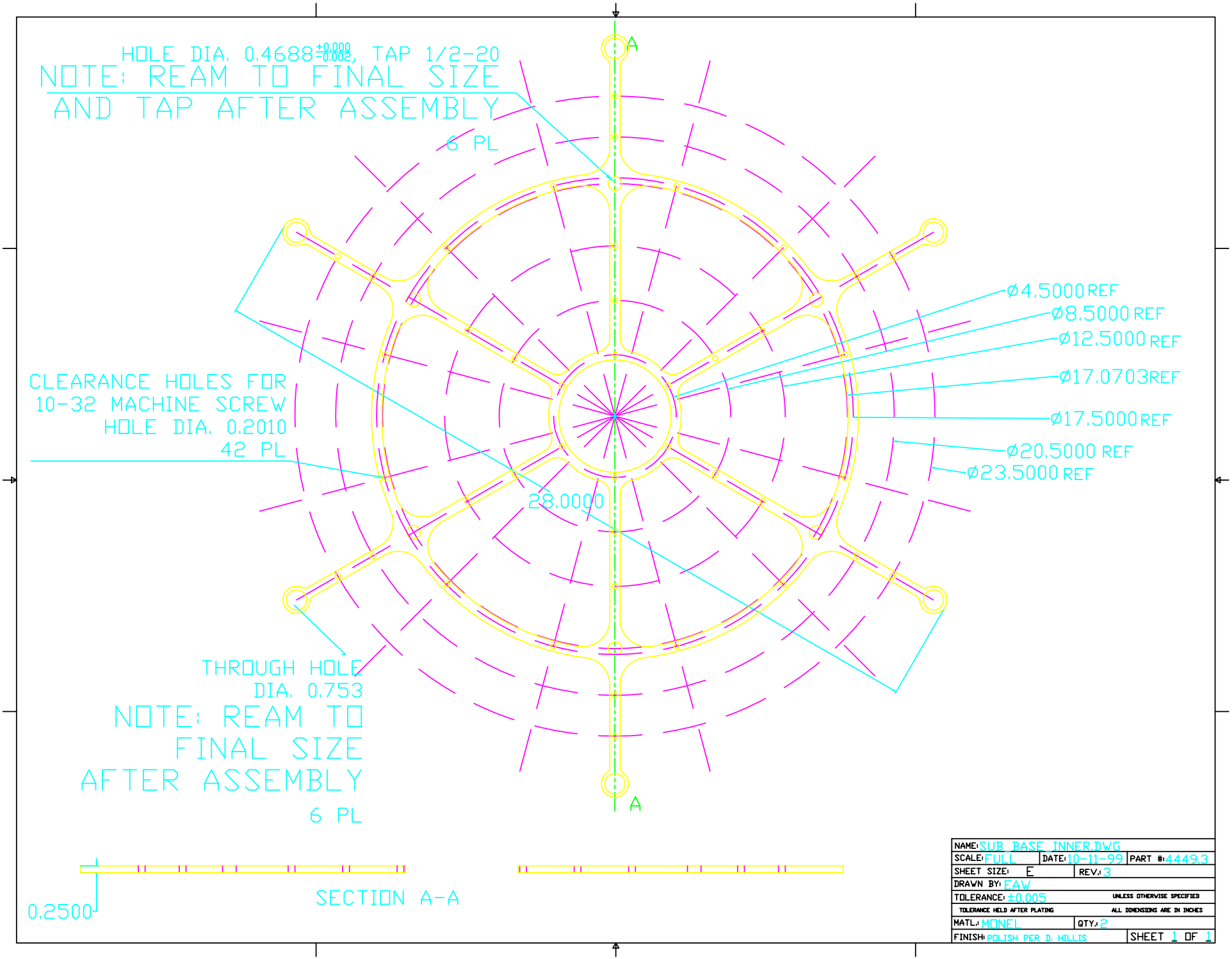
HOLE DIA. 0.4688 +0.000 -0.002, TAP 1/2-20
NOTE: REAM TO FINAL SIZE
AND TAP AFTER ASSEMBLY
6 PL
A
Ø4.5000 REF
Ø8.5000 REF
Ø12.5000 REF
Ø17.0703 REF
Ø17.5000 REF
Ø20.5000 REF
Ø23.5000 REF
CLEARANCE HOLES FOR
10-32 MACHINE SCREW
HOLE DIA. 0.2010
42 PL
28.0000
THROUGH HOLE
DIA. 0.753
NOTE: REAM TO
FINAL SIZE
AFTER ASSEMBLY
6 PL
A
0.2500
SECTION A-A
NAME: SUB BASE INNER.DWG
SCALE: FULL
DATE: 10-11-99
PART #: 4449.3
SHEET SIZE: E
REV.: 3
DRAWN BY: EAW
TOLERANCE: ±0.005
UNLESS OTHERWISE SPECIFIED
TOLERANCE HELD AFTER PLATING
ALL DIMENSIONS ARE IN INCHES
MATL.: MONEL
QTY.: 2
FINISH: POLISH PER D. HILLIS
SHEET 1 OF 1

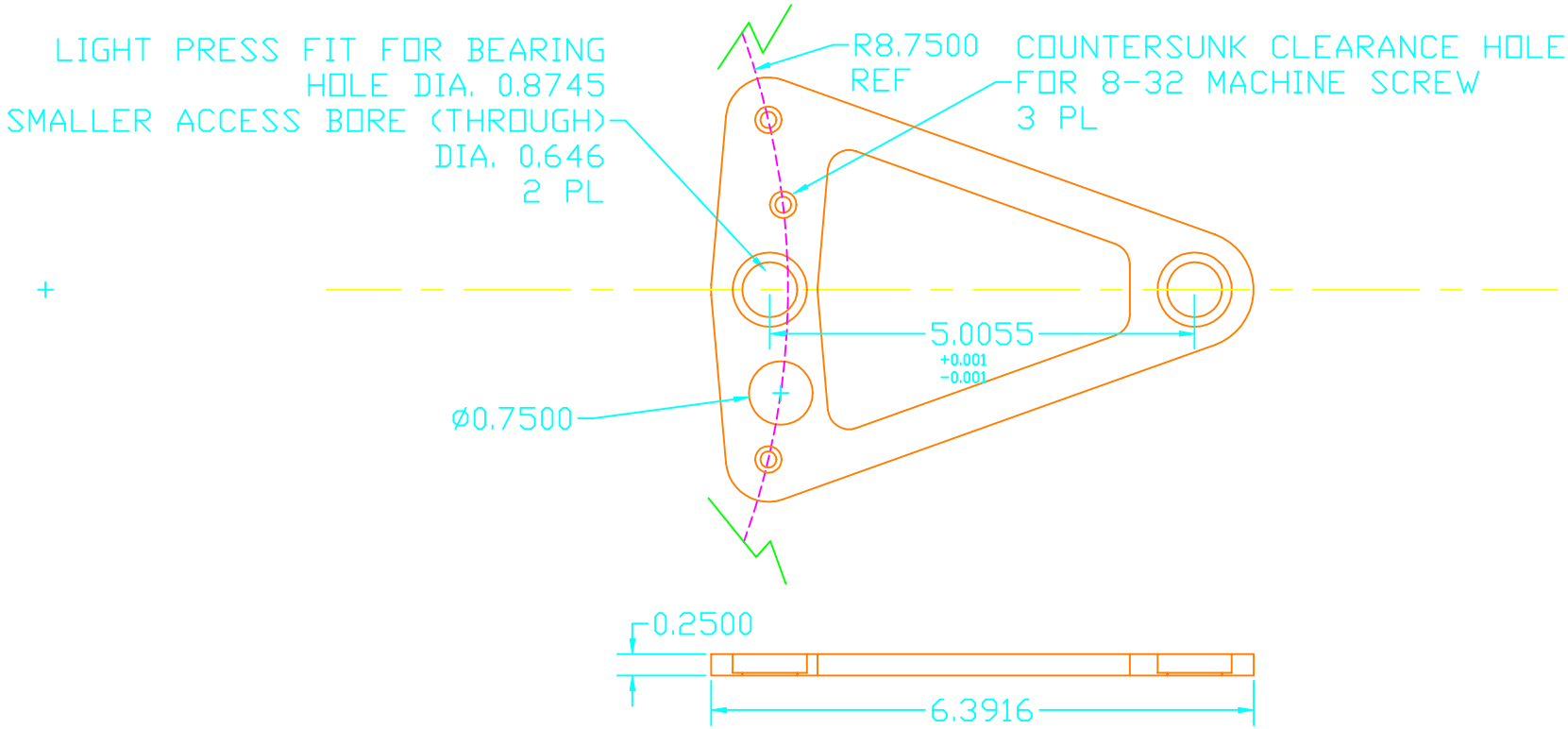

NAME: SUB_BASE_GEAR_PLATE.DWG		
SCALE: FULL	DATE: 10-15-99	PART #: 4459.1
SHEET SIZE: C	REV.: 1	
DRAWN BY: EAW		
TOLERANCE: ±0.005	UNLESS OTHERWISE SPECIFIED	
TOLERANCE HELD AFTER PLATING	ALL DIMENSIONS ARE IN INCHES	
MATL.: MONEL	QTY.: 1	
FINISH:	SHEET 1 OF 1	

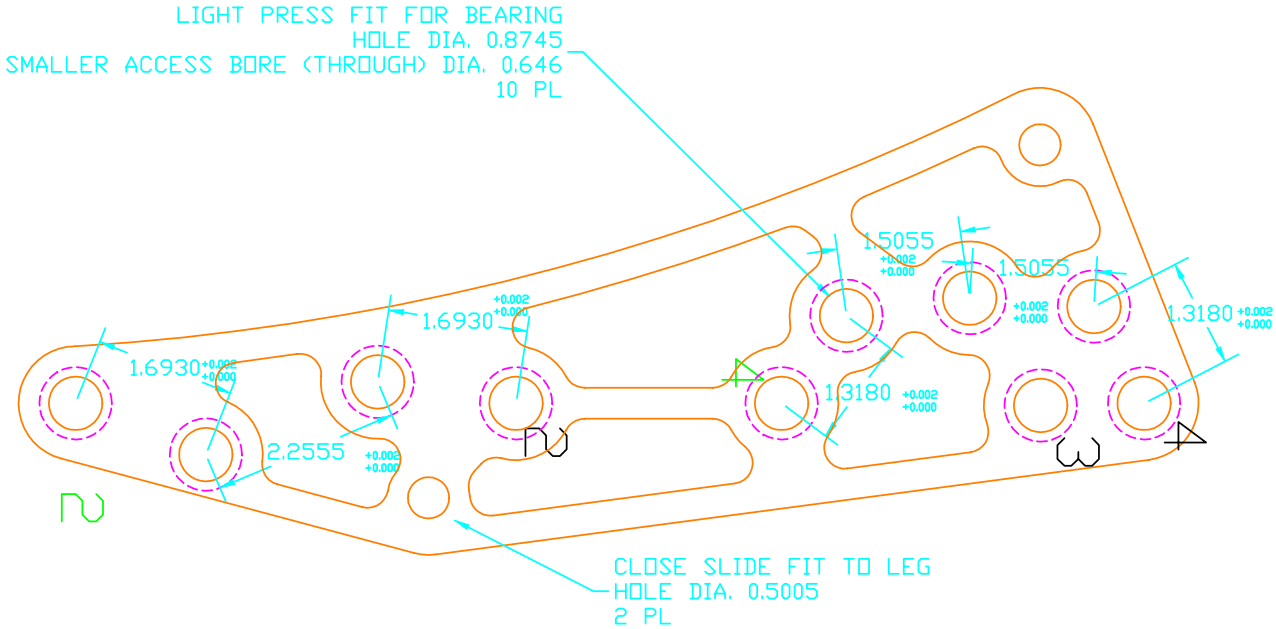

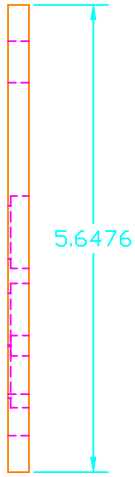

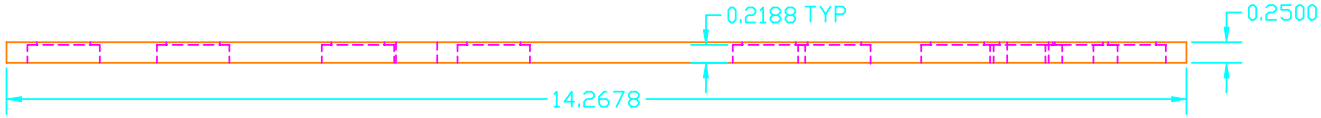

NAME: WING_RIGHT.DWG		
SCALE: FULL	DATE: 12-6-99	PART #: 4422.4
SHEET SIZE: C	REV.: 4	
DRAWN BY: EAW		
TOLERANCE: ±0.005	UNLESS OTHERWISE SPECIFIED	
TOLERANCE HELD AFTER PLATING	ALL DIMENSIONS ARE IN INCHES	
MATL.: MONEL	QTY.: 1	
FINISH:	SHEET 1 OF 1	

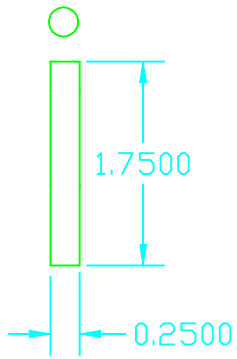

NAME: ZODIAC_LOCATOR_DOWEL.DWG		
SCALE: FULL	DATE: 8-3-99	PART #: 4265.2
SHEET SIZE: B	REV.: 2	
DRAWN BY: EAW		
TOLERANCE: ±0.003	UNLESS OTHERWISE SPECIFIED	
TOLERANCE HELD AFTER PLATING	ALL DIMENSIONS ARE IN INCHES	
MATL.: STAINLESS STEEL DOWEL	QTY.: 2	
FINISH: USE DOWEL PIN AS RAW MATERIAL GRIND MACHINED ENDS	SHEET 1 OF 1	

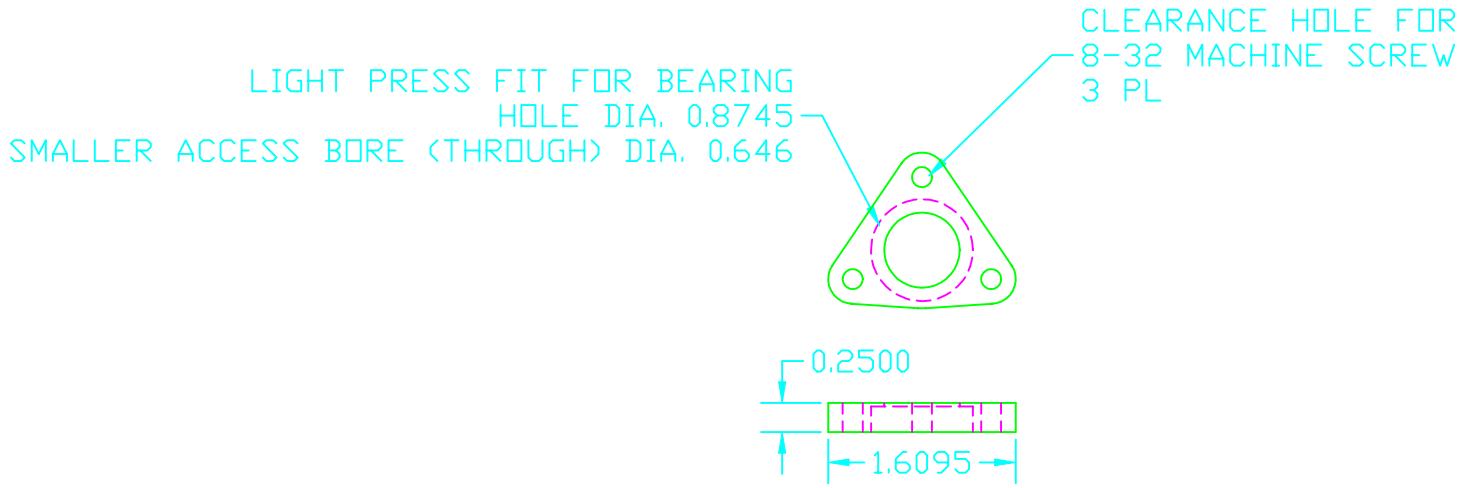

NAME: ZODIAC_UNDER_PLATE		
SCALE: FULL	DATE: 7-28-99	PART #: 4415.1
SHEET SIZE: B	REV.: 1	
DRAWN BY: EAW		
TOLERANCE: ±0.005	UNLESS OTHERWISE SPECIFIED	
TOLERANCE HELD AFTER PLATING	ALL DIMENSIONS ARE IN INCHES	
MATL.: MONEL	QTY.: 1	
FINISH:	SHEET 1 OF 1	

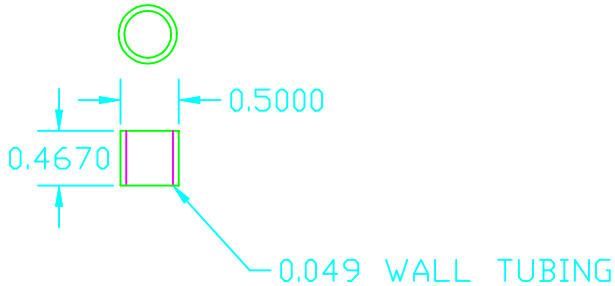

NAME: ZODIAC_SPACER_2.DWG		
SCALE: FULL	DATE: 8-3-99	PART #: 4256.1
SHEET SIZE: B	REV.: 1	
DRAWN BY: EAW		
TOLERANCE: ±0.001	UNLESS OTHERWISE SPECIFIED	
TOLERANCE HELD AFTER PLATING	ALL DIMENSIONS ARE IN INCHES	
MATL.: STAINLESS STEEL TUBING 0.5 O.D. X 0.049 WALL	QTY.: 1	
FINISH: POLISH OUTSIDE		SHEET 1 OF 1

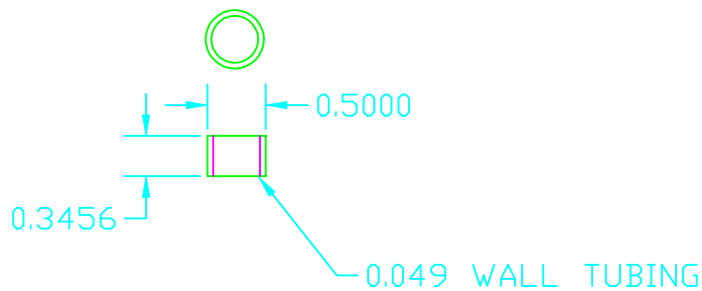

NAME: ZODIAC_SPACER_1.DWG		
SCALE: FULL	DATE: 8-19-98	PART #: 4257.1
SHEET SIZE: B	REV.: 1	
DRAWN BY: EAW		
TOLERANCE: ±0.001	UNLESS OTHERWISE SPECIFIED	
TOLERANCE HELD AFTER PLATING	ALL DIMENSIONS ARE IN INCHES	
MATL.: STAINLESS STEEL TUBING 0.5 O.D. X 0.049 WALL	QTY.: 1	
FINISH: POLISH OUTSIDE		SHEET 1 OF 1

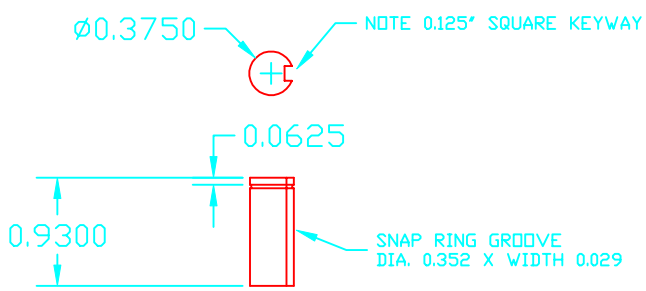

NOTE: DIMENSIONS GIVEN FROM TOP OF SHAFT TO TOP OF GROOVES

NAME: ZODIAC_SHAFT_3.DWG		
SCALE: FULL	DATE: 8-3-99	PART #: 4255.2
SHEET SIZE: B	REV.: 2	
DRAWN BY: EAW		
TOLERANCE: ±0.001	UNLESS OTHERWISE SPECIFIED	
TOLERANCE HELD AFTER PLATING	ALL DIMENSIONS ARE IN INCHES	
MATL.: COLD FINISHED OR GROUND STAINLESS STEEL ROD	QTY.: 1	
FINISH: GRIND AND CHAMFER ROD ENDS	SHEET 1 OF 1	

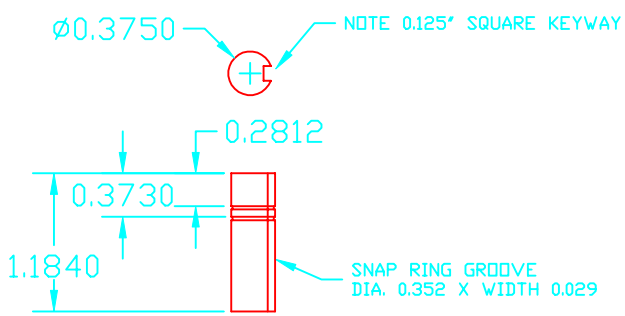

NOTE: DIMENSIONS GIVEN FROM TOP OF SHAFT TO TOP OF GROOVES

NAME: ZODIAC_SHAFT_2.DWG		
SCALE: FULL	DATE: 8-3-99	PART #: 4254.2
SHEET SIZE: B	REV.: 2	
DRAWN BY: EAW		
TOLERANCE: ±0.001	UNLESS OTHERWISE SPECIFIED	
TOLERANCE HELD AFTER PLATING	ALL DIMENSIONS ARE IN INCHES	
MATL.: COLD FINISHED OR GROUND STAINLESS STEEL ROD	QTY.: 1	
FINISH: GRIND AND CHAMFER ROD ENDS	SHEET 1 OF 1	

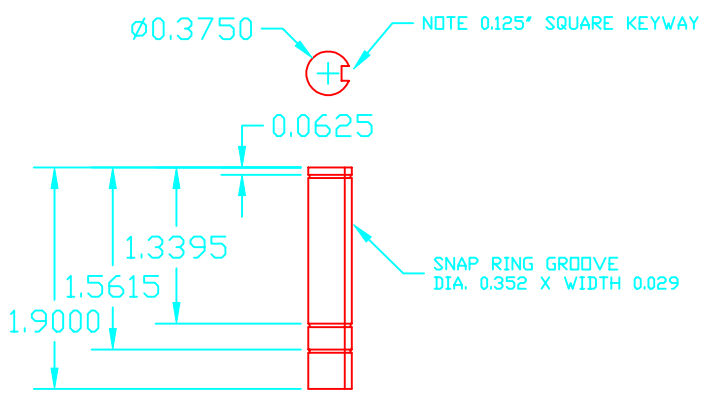

NOTE: DIMENSIONS GIVEN FROM TOP OF SHAFT TO TOP OF GROOVES

NAME: ZODIAC_SHAFT_1.DWG		
SCALE: FULL	DATE: 8-3-99	PART #: 4253.2
SHEET SIZE: B	REV.: 2	
DRAWN BY: EAW		
TOLERANCE: ±0.001	UNLESS OTHERWISE SPECIFIED	
TOLERANCE HELD AFTER PLATING	ALL DIMENSIONS ARE IN INCHES	
MATL.: COLD FINISHED OR GROUND STAINLESS STEEL ROD	QTY.: 1	
FINISH: GRIND AND CHAMFER ROD ENDS	SHEET 1 OF 1	

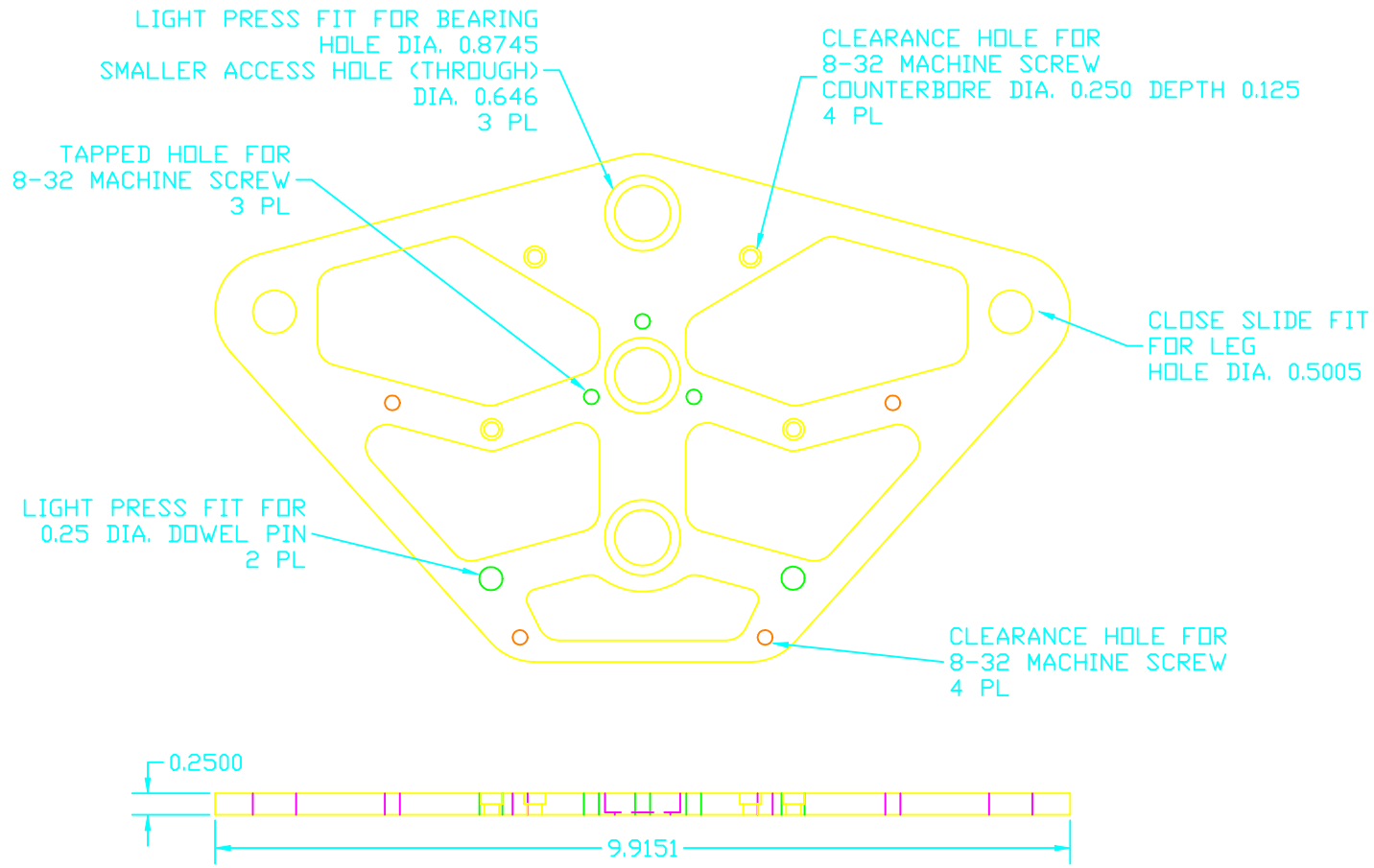

NOTE: SOME DIMENSIONS
OMITTED DUE TO COMPLEXITY
OF PART.
DRAWING IS TO SCALE.

NAME: ZODIAC_PLATE_TOP.DWG		
SCALE: FULL	DATE: 8-2-99	PART #: 4266.3
SHEET SIZE: C	REV.: 3	
DRAWN BY: EAW		
TOLERANCE: ±0.005	UNLESS OTHERWISE SPECIFIED	
TOLERANCE HELD AFTER PLATING	ALL DIMENSIONS ARE IN INCHES	
MATL.: MONEL	QTY.: 1	
FINISH:	SHEET 1 OF 1	

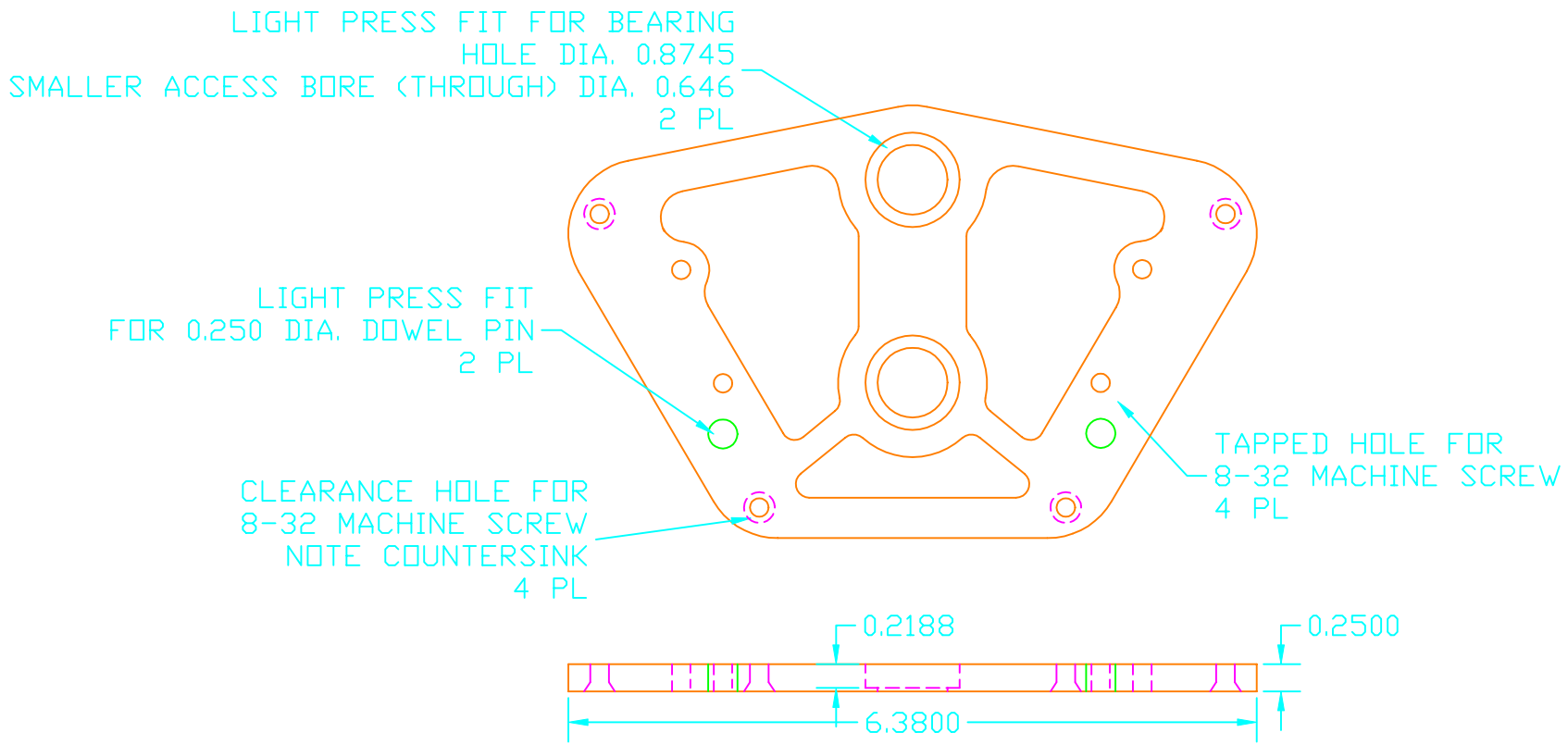

NAME: ZODIAC_PLATE_BOTTOM.DWG		
SCALE: FULL	DATE: 8-2-99	PART #: 4252.3
SHEET SIZE: B	REV.: 3	
DRAWN BY: EAW		
TOLERANCE: ±0.005	UNLESS OTHERWISE SPECIFIED	
TOLERANCE HELD AFTER PLATING	ALL DIMENSIONS ARE IN INCHES	
MATL.: MONEL	QTY.: 1	
FINISH:	SHEET 1 OF 1	

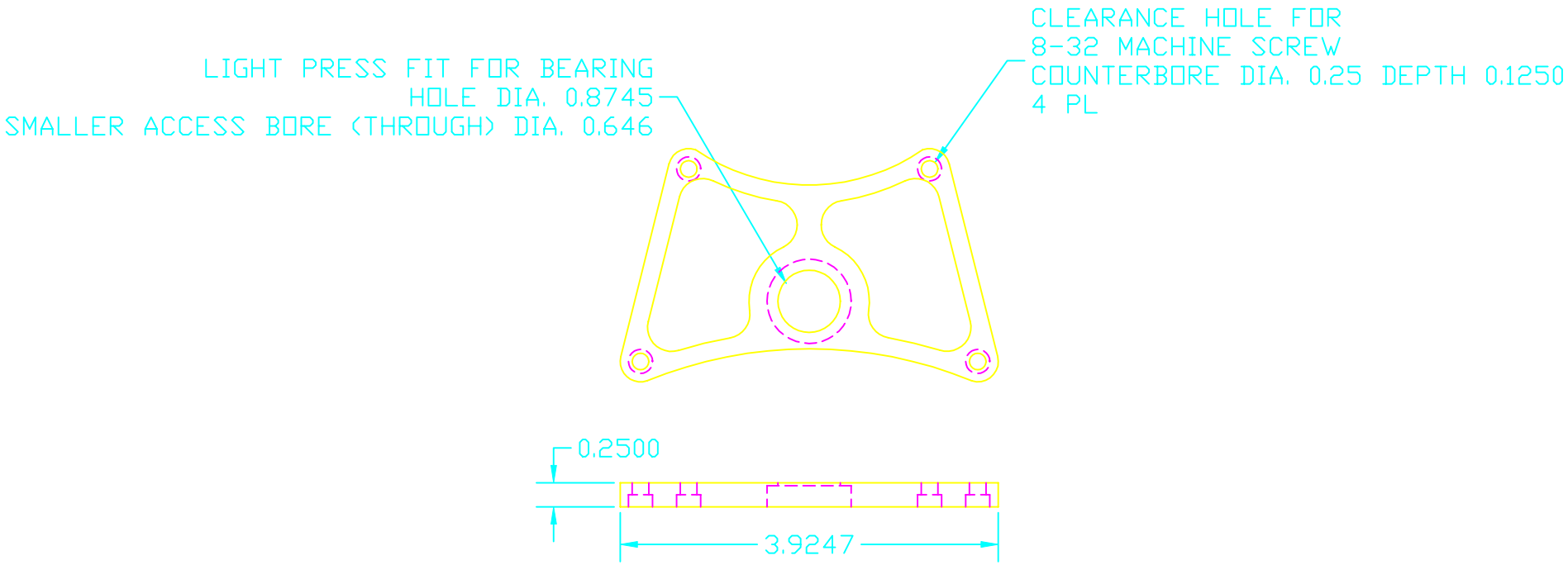

NAME: ZODIAC_MINI_PLATE		
SCALE: FULL	DATE: 7-28-99	PART #: 4414.1
SHEET SIZE: B	REV.: 1	
DRAWN BY: EAW		
TOLERANCE: ±0.005	UNLESS OTHERWISE SPECIFIED	
TOLERANCE HELD AFTER PLATING	ALL DIMENSIONS ARE IN INCHES	
MATL.: MONEL	QTY.: 1	
FINISH:		SHEET 1 OF 1

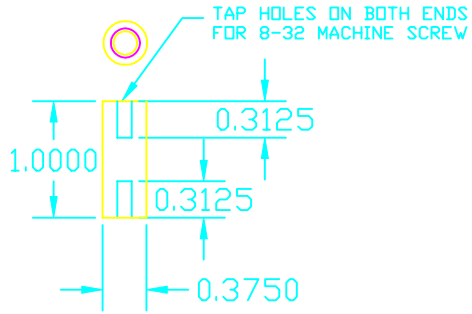

NAME: ZODIAC_LOWER_STANDOFF.DWG		
SCALE: FULL	DATE: 8-3-99	PART #: 4264.2
SHEET SIZE: B	REV.: 2	
DRAWN BY: EAW		
TOLERANCE: ±0.003	UNLESS OTHERWISE SPECIFIED	
TOLERANCE HELD AFTER PLATING	ALL DIMENSIONS ARE IN INCHES	
MATL.: STAINLESS STEEL BAR	QTY.: 4	
FINISH:	SHEET 1 OF 1	

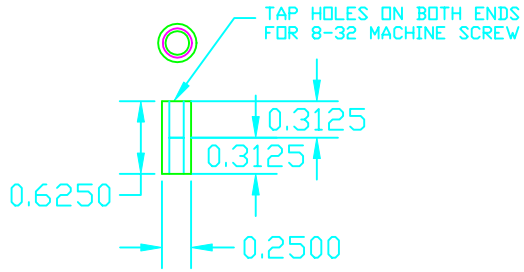

NAME: ZODIAC_UPPER_STANDOFF.DWG		
SCALE: FULL	DATE: 8-3-99	PART #: 4416.1
SHEET SIZE: B	REV.: 1	
DRAWN BY: EAW		
TOLERANCE: ±0.003	UNLESS OTHERWISE SPECIFIED	
TOLERANCE HELD AFTER PLATING	ALL DIMENSIONS ARE IN INCHES	
MATL.: STAINLESS STEEL BAR	QTY.: 4	
FINISH:	SHEET 1 OF 1	